Regular Board Meeting Agenda
Monday, September 10, 2018
JCPSD Office 7:00PM

The Board will discuss and may take action on the following items:

Call to Order:
- Roll call
- Approval of the agenda
- Public Comments
- JCPSD Employee Comments

Old Business:
- Review minutes of the July 31 special board meeting
- Review minutes of the August 7 regular board meeting
- Discuss the District's financial status of paying bills
- Discuss update on pump station repairs, upgrades and related costs/funding options
    - Update on repairs/upgrades to pump station 4-2
    - Update on repairs to pump station 3-9
    - Update on relocation of office generator

New Business:
- Conduct annual evaluation of the General Manager
- Discuss and possible action on sewer service request from Shenandoah Junction Public Sewer
- Discuss customer feedback from July 31, 2018 Special Meeting regarding Title 150 Sewer Rules
- Discuss retaining an engineer for a capacity analysis
- Review and execute the addendum to the Yount, Hyde, & Barbour auditing engagement letter dated August 10 2018
- Discuss the District's Sanitary Sewer Specifications and Standards
- Discuss onsite inspections policy and process
- Discuss grease trap inspection policy and process
- Discuss topics for the next newsletter edition
- Discuss the District's status on the 16-0616 Project
- Update on JCPSD transition to City of Charles Town
    - Update on billing system transfer to Charles Town
    - Discuss staffing
- Update on status of current legal cases:
    - Jefferson County Commission PSC Case No. 17-0915-PSWD-PC consolidated with Complaint Case PSC Case No. 18-0006-PSD-C
- Discuss monthly staff reports
    - General Manager report
        - Update on financial audit
        - Update on PSC training
    - Other staff reports
        - Operations Manager report
        - Engineering/Technology report
        - Billing Department report
- Discuss monthly correspondence
- Discuss any expenses over budget for the year
- Approve monthly disbursements
- Approve transfer of $5,530.51 from the New Sewer Security Deposit account to the Sewer Operating account for 51 security deposit refunds
- Approve transfer of $114.24 from the Water Security Deposit account to the Water Operating account for 2 security deposit refunds
- Approve transfer of $1508.96 from the Renewal & Replacement account to the Sewer Operating account for upgrade/repair to pump station 3-6
- Approve transfer of $6158.20 from the Renewal & Replacement account to the Sewer Operating account for new pump at pump station 4-4
- Approve transfer of $1600.42 from the Renewal & Replacement account to the Sewer Operating account for pump repair and capacitors at pump station 4-4
- Public comments

Discuss Litigation, Personnel Matters, and Contract Negotiations:

(The items below may be discussed in Executive Session)

- Discuss consolidated cases Jefferson County Commission PSC Case No. 17-0915-PSWD-PC & Complaint Case PSC Case No. 18-0006-PSD-C
- Conduct annual evaluation of the General Manager

Proposed items to include on agenda of next or future board meetings:

- Discuss posting online a bill estimator with all charges, surcharges, fee, taxes, etc.
- Review and discuss wastewater Strategic Plan 2015
- JCPSD Employee Manual (including but not limited to)
    - Grievance Process
    - Establishing a documented process for filling internal job vacancies
    - Employee conflicts of interest process and training
    - Posting of external comments and surveys on JCPSD Property
    - Disposal of JCPSD furniture & equipment
    - Employee Training
    - Employee communications/opinions

August Billing:

Public Service District: Sewer (Metered)

- Residential – 2487 Customers
    - August 2017 – 2368 Customers
- Commercial – 158 Customers
    - August 2017 – 160 Customers
- Public Authority – 11 Customers
    - August 2017 – 11 Customers
- Industrial – 7 Customers (7 on Billing, 4 on NPDES Permit)
    - August 2017 – 7 Customers
- EDU's – 13,576,820 Gallons Billed in June (4500 avg gal/customer/mo) = 3017 EDU's
- 1 New Homes in August (1 EDU's)
- 0 New Commercial in August (0 EDU's)

Public Service District: Sewer (Unmetered)

- Residential – 78 Customers, (118 Units)
- Commercial – 0 Customers, (0 Units)

Public Service District: Water

- Glen Haven – 74 Customers
- Cavaland – 42 Customers

Public Service District: Capital Improvement Fees Paid by EDU's

- 2013 – 110 (87 residential, 23 commercial)
- 2014 – 47 (45 residential, 2 commercial)
- 2015 – 132 (32 residential, 100 commercial)
- 2016 – 85 (34 residential, 51 commercial)
- 2017 – 66 (65 residential, 1 commercial)
- 2018 – 54 (26 residential, 28 commercial)

Public Service District: Capacity Assurance Fees Paid by EDU's

- 2017 – 18 (18 residential (3 converted to CIFs)

Next Meeting:

- Wednesday, October 3, 2018 at 7:00PM – Jefferson County PSD Office, 340 Edmond Road, Suite A, Kearneysville

Jefferson County Public Service District
Special Board Meeting
July 31, 2018

The special meeting of the Jefferson County Public Service District was held from 7:00PM on Tuesday, July 31, 2018 in the meeting room at the Districts office in Kearneysville. Those in attendance included: Chairman, Roger Forshee; Secretary, Tara Ashley (speakerphone); Treasurer, Todd Milliron; General Manager, April Shultz; and new legal counsel, Susan Riggs, from Spilman Thomas & Battle (speakerphone).

CALL TO ORDER
Chairman Roger Forshee called the meeting to order at 7:00PM.

Approval of agenda
The agenda was approved unanimously.

Action: **Motion made by Mr. Forshee and seconded by Mr. Milliron to approve the agenda as presented.**

Prior to taking action, Ms. Ashley stated she felt the meeting was frivolous and could have waited until the regular meeting next week.

Unanimously approved.

Discuss Jefferson County Commission PSC Case No. 17-0915-PSWD-PC consolidated with Complaint Case PSC Case No. 18-0006-PSD-C
The District had trouble with the conference call system during this discussion which caused Mrs. Riggs and Mrs. Ashley getting disconnected multiple times.

During the opening statement Mr. Forshee recognized that members of the audience could provide value during this discussion and encouraged their participation.

The District's new legal counsel, Mrs. Susan Riggs, explained that the intervenors in the case filed an appeal with the West Virginia Supreme Court of Appeals. Since the District was named as a respondent in that case, the District is able to file a respondent's brief or summary response due by September 10th. The courts have scheduled a hearing for the case on October 23rd in Charleston. Mrs. Riggs stated she would like to get with the other respondents listed on the scheduling order, the Jefferson County Commission and City of Charles Town, to formulate a response and submit it jointly.

Mr. Forshee questioned whether a change in the County Commissioners and their opinions could affect the consolidation and all the work that has been done to get to this point. Mrs. Riggs replied that after much research she hasn't found any documentation to support the change to ratify a previous County Commission's decisions. Mrs. Riggs felt it was unlikely that a court would uphold a new County Commission trying to resend a previous County Commission's action.

The Board encouraged Mrs. Riggs to work with the attorneys from both the Jefferson County Commission and the City of Charles Town to develop a reply for the appeal.

Mr. Pete Kubic, Charles Town Utility Board member, was in the audience along with other members from Charles Town and commented that Mr. Hoy Shingleton, Charles Town's attorney, has already been in contact with Mrs. Riggs.

Mr. Forshee also questioned if Mrs. Riggs could reiterate in her response how the District has been completing repairs to the District's system that were detailed in the Sewer Transmission Project without encountering any catastrophic failures that were stressed as the need for the project in the project's court hearings. He reminded the audience that the District has never used its Emergency Response Plan and

has never experienced a catastrophic failure. He also suggested that "customer" be defined in the response as the Board was being accused of not taking care of its customers by the intervenors in the case. Mr. Forshee wanted it mentioned that one of the developers intervening in the case, Shenandoah Junction, is in fact not a District customer. Mrs. Riggs explained that she will be sure to make the courts aware of the true picture, but mentioned the reply does have a page limitation.

Mrs. Riggs explained that the intervenors are claiming two assignments of error relating to the project not necessarily the consolidation in their appeal. She commented that she wasn't sure how appealing the decision would move the project forward any faster.

Mr. Forshee questioned whether the Public Service Commission could require the District to complete the project. Mrs. Riggs stated that they may not force that particular project to be built, but they could have authority over the District and the City of Charles Town that facilities are being built to serve current and future customers and would keep an eye on the progress. If the District was forced into receivership, Charles Town would most likely be the receiver, then parties may have to go back to the Public Service Commission to work out a project.

Kristen Stolipher, Charles Town Assistant Utility Manager commented that Charles Town supports the idea to present a unified front among the respondents.

Mr. Forshee questioned whether the General Manager or Board need to attend the October hearing in Charleston. Mrs. Riggs stated the Board should wait to make a decision on this to see how the appeal progressed.

Jaqueline Milliron, District customer, commented that she has been researching why the District is not following the Title 150 Sewer Rules and why the existing customers are paying for future growth which is wrong, particularly section 5 which are the Mainline Extension rules. Mr. Milliron stated he thought this rule was used for the Driswood Elementary School and Aspen Greens development. Mrs. Shultz confirmed that was correct.

Mr. Milliron mentioned that Shenandoah Junction did not submit an application for service prior to the sewer project approval and wasn't sure if Harvest Hills had submitted anything prior. He explained that how the District take action or evaluate those intervenors projects if no application has been submitted.

Mrs. Stolipher commented that Charles Town had received a request from Shenandoah Junction this month, but referred them to the District since the consolidation is not complete and they would be a District customer. Mrs. Shultz confirmed that she received a sewer service request from Shenandoah Junction this month. Mrs. Stolipher also mentioned that Harvest Hills did have an Alternate Mainline Extension Agreement filed at the Public Service Commission in the past so the commitment was there for them do all of the offsite infrastructure to connect to the District's system.

Mrs. Shultz explained to the Board that she had received a request from Shenandoah Junction and drafted a response commitment letter. Mr. Forshee requested Mrs. Riggs get a copy of the request and the response. Mr. Milliron requested the Board receive a copy as well.

Mrs. Milliron also stated that some of the upgrades listed in the project have been addressed which comes with a cost savings and should be mentioned in the appeal.

Mrs. Riggs stated that the District is not allowed to add any new information to the case because it would not be in the record.

Mrs. Stolipher mentioned that Charles Town has done a review for a project, but full engineering will not be conducted until the consolidation is complete. She mentioned that cost savings have been noted and will be evaluated to determine what needs to be done.

Mr. Forshee brought up recent emails of discussions regarding existing easements and easements needed for the project. Mr. Milliron stated that he is preparing a white paper on the sewer project and in that discussed the requirement to acquire the remaining 20% of the easements to begin the sewer project, one of which is one of the intervenors in the case. He commented that the Board will provide Mrs. Riggs with some interesting points to ponder while working on the response.

Mr. Forshee also questioned whether the rate equalization over a ten year period was something the Board should be worried about since it was such a long time. He stated he was questioned by a reporter and informed that individual the Board supported consolidation. Mrs. Riggs replied that it would be a Charles Town issue on how they could consolidate the rates, but the Board should stay involved in hopes it could happen more quickly.

Mrs. Riggs stated that she will move forward with formulation on a response for the appeal. The Board agreed.

Action: No action taken by the Board.

Discuss PSD building lease extension and other building lease options

Mr. Forshee began the discussion by stating he discovered the lease extension had been executed by the District's Secretary, Ms. Ashley and wanted to understand the authority for signing of the lease. He stated that he reviewed the District's Rules of Procedures and it clearly outlines the duties of the board members. Mr. Forshee requested Mrs. Riggs provide an overview of her thoughts regarding that and if Ms. Ashley was authorized to sign on behalf of the Board and if so, his concern would be moot.

For background, Mr. Forshee explained that the Board made a unanimous decision at the July meeting to send the lease extension and current lease, which he stated was often referred to as a "bad" lease, to Mr. Crawford for review and if he had no issues the Board agreed to sign. He stated that prior to that motion there was a lengthy discussion in executive session on that lease. Mr. Forshee then elaborated that in that discussion it was mentioned that the District currently pays property taxes of the landlord as a requirement of the lease and continued in the lease extension. He stated he had concerns with this since the District is a tax exempt entity and wondered if it was appropriate to pay the taxes of a private individual moving forward.

Mr. Forshee stated that it was also discussed at that meeting his concern for the 90 day notice provision for either party to terminate the lease. He explained that his concern was the possible eviction and added stress that would be involved if the landlord utilized the 90 day notice given the recent appeal of the intervenors which could delay the consolidation.

Ms. Riggs explained that she doesn't read the District's Rules of Procedures as being restrictive or prohibitive for allowing only one particular person to sign documents since the actual signing is more of an administrative function after the Board takes an official action. She stated she does not feel there was a problem with Ms. Ashley signing the lease and believed that any of the Board members could have signed the lease.

Ms. Ashley then asked Mrs. Riggs what the potential result or consequences of having a motion or action not fulfilled by the Board members after it has been made. Mrs. Riggs explained that an entity makes a decision and is relied on by others to move forward. Ms. Ashley asked if it could open up litigation if the actions aren't carried out and Mrs. Riggs stated that it could and would not be the best practice to follow.

Mrs. Riggs explained to the Board that the lease extension becomes active at the end of the current lease expiration date of October 31, 2018.

Mr. Forshee commented that he will agree to disagree with Mrs. Riggs' understanding of the duties of Board members and interprets them to authorize the Chairman to sign documents and does not see that similar language for the other members. He explained his frustrations that given his concerns that were made known, Ms. Ashley took it upon herself to sign the lease. He additionally found disturbing that when reached out to staff after the July meeting to contact the landlord about the 90 day provision, he was told

he was out of town but was able to sign the lease extension. Mr. Forshee felt it was signed absent a Board decision because he believed it was clearly stated in the July meeting audio that the Board would sign if no issues were found and his interpretation of Mr. Crawford's written review of the lease mentioned the 90 day provision.

Ms. Ashley disagreed with Mr. Forshee and stated that Mr. Crawford followed up with an email to staff reiterating that he did not have any issues with the lease extension and was simply pointing out that given the current situation with consolidation that the lease extension would be more appropriate for the District. She explained that likewise, she found it disturbing that when a Board action is unanimously voted upon after issues were discussed as a whole that the Chairman took it upon himself to renegotiate a lease or give the idea to renegotiate and failed to act on the motion that was agreed upon.

Mr. Forshee replied that the appropriate action would have been to follow the motion and call a special meeting if there were issues and that meeting could have been used to discuss the issues that were brought up, but Ms. Ashley choose it upon herself to sign the lease.

Ms. Ashley disagreed and there were no further discussions.

Action: No action taken by the Board.

Action: Motion made Mr. Forshee and seconded by Mr. Milliron to adjourn.

Ms. Ashley urged her fellow Board members to consider when calling a special meeting that whether or not such a meeting should be held when there are no actions needing Board input currently and in her opinion it did not reflect well upon the Board's frugality when no actions were taken and it could have waited until the regular meeting next week given the costs that will be associated with this meeting taking place.

Mr. Forshee stated that he felt it was important to have discussions regarding the appeal from the developers who are against the current Board and consolidation and at the time the agenda was published the lease extension had not yet been signed and wanted an opportunity to have a special meeting to discuss that.

Ms. Ashley clarified that she did inform the Board that if the lease was not sign by the Chairman then she would take it upon herself to sign.

Unanimously approved.

There being no further business at this time, the meeting was adjourned at 8:10PM.

The next regular meeting is scheduled for Tuesday, August 7, 2018 at 7:00PM at 340 Edmond Road, Suite A at the Districts office in Kearneysville.

Respectfully Submitted,

Roger C. Forshee
Chairman

Tara D. Ashley
Secretary

Jefferson County Public Service District
Regular Board Meeting
August 7, 2018

The monthly meeting of the Jefferson County Public Service District was held at 7:00PM on Tuesday, August 7, 2018 in the meeting room at the District's office in Kearneysville. Those in attendance included: Chairman, Roger Forshee; Treasurer, Todd Milliron; General Manager, April Shultz; Office Administrator, Ashley Stottlemyer; Operations Manager, Joseph Freeze; new legal counsel from Spilman Thomas & Battle, Susan Riggs; and County Commission liaison, Commissioner Josh Compton. Secretary, Tara Ashley was absent from the meeting.

CALL TO ORDER
Mr. Forshee called the meeting to order at 7:05PM.

The Board welcomed Mrs. Susan Riggs from Spilman Thomas & Battle as the District's new legal counsel.

Approval of agenda
Mr. Forshee suggested the Board postpone the General Manager's evaluation until the next regular monthly meeting.

Action: **Motion made by Mr. Forshee and seconded by Mr. Milliron to approve the agenda as presented with the exception of moving the General Manager's evaluation to the September meeting. Approved 2-0.**

Public Comments
None.

Employee Comments
Joseph Freeze, Operations Manager, questioned again if the Board would consider offering severance packages to employees who do not wish to go to Charles Town when the consolidation is complete. Mr. Forshee stated that this was an item for discussion on tonight's agenda.

OLD BUSINESS

Review minutes of July 9 regular board meeting
Mr. Forshee requested the minutes reflect there was an issue with the District's conference call line and not his cell phone reception.

Action: **Motion made by Mr. Milliron and seconded by Mr. Forshee to accept the July 9, 2018 regular board meeting minutes with the noted change regarding the phone line. Approved 2-0.**

Discuss the District's financial status (status of paying bills)
Mrs. Shultz stated the District will have enough to pay the August disbursements for sewer, but will need to collect $2515.88 to cover the previous disbursements for water.

Action: **No action required by the Board.**

Discuss pump station repairs, upgrades and related costs/funding options

- Update on repairs/upgrades to pump station 4-2
- Update on repairs to pump station 3-9
- Update on relocation of office generator

Mr. Freeze informed the Board he received two quotes to repair/upgrade pump station 4-2 and one quote to reline the wetwell. He also spoke with Tom Vance from Godwin for a pump around to stop flows to the pump station when the repair work is taking place. Mr. Freeze also stated that the pumps will not be replaced at this time, but will be evaluated by Marcum once they are pulled.

Mr. Forshee questioned if both quotes were similar in scope since they were quite different in price. Mr. Freeze stated, and Mrs. Shultz later agreed, both estimates were similar using similar materials. He also asked whether the relining and upgrade work should be considered as one project or broken down into two. Mrs. Shultz replied that after talking with the Public Service Commission, they instructed staff to do as one project since it was not a major upgrade. Mrs. Riggs agreed with Mrs. Shultz and stated that two different contractors would be doing two different tasks and would be ok to do as separate projects.

Mrs. Stolipher commented that Charles Town uses a company by the name of Lyttle for relining the wetwells. She suggested the District contact them to provide a quote as well.

Mr. Forshee thanked Mrs. Stolipher for the information and has requested, as he has in the past, that the District use consistency and standardization with Charles Town. He also suggested that staff may want go out to bid for projects to get more feedback. Mrs. Stolipher stated that Charles Town generally tries to get multiple bids as their practice to follow and evaluate warranty and price.

Mr. Milliron proposed staff use the lesser of the prices for the upgrade work and put a ceiling of $20,000 on the relining after going out to bid and then let Mrs. Shultz and Mr. Freeze decide the best value and warranty.

Action: **Motion made by Mr. Forshee and seconded by Mr. Milliron to approve the quote from Marcum Pump for repair/upgrade of pump station 4-2. Approved 2-0.**

Action: **Motion made by Mr. Forshee and seconded by Mr. Milliron to approve the relining of pump station 4-2 with material that provides the best value and warranty not to exceed $20,000. Approved 2-0.**

Mrs. Shultz informed the Board that pump station 3-9 has one pump out of service and are having problems with the second pump so staff ordered two new pumps. Mr. Freeze explained that the original pumps were Flygt pumps and being replaced with Keen pumps. He stated that the Keen were about half the costs of Flygts and American made. Mrs. Stolipher stated that Charles Town uses both Flygt and Oman pumps. Mr. Forshee reiterated the use of consistency and standardization with Charles Town.

Regarding moving the office generator, staff suggested moving it to pump station 1-12 or 4-5. Mrs. Stolipher stated she spoke with Dave Payne from Apparatus Repair & Engineering to look at the location, but with Charles Town's possible project, pump station 1-12 could be decommissioned. Since this pump station does need a generator, she suggested possibly speaking with an electrician to do a hookup for a portable generator and staff could borrow Charles Town's portable pump if needed. Mr. Freeze will work with Charles Town's electrician to get a price to install a hookup at pump station 1-12 and hold off on moving the office generator at this time.

Action: **Motion made by Mr. Forshee and seconded by Mr. Milliron to keep this as a standing agenda item. Approved 2-0.**

NEW BUSINESS

Discuss online bill paying/reported or known issues

Mr. Forshee requested this agenda item due to having an online billing issue last month when attempting to pay his monthly bill and hearing other issues from customers. He questioned what staff has done to solve the known billing issues.

Mrs. Shultz explained that staff worked countless hours gathering multiple quotes for a new software company. She worked with multiple companies and the District's IT professional, Neal Nilsen, to find a company that would handle both the billing and accounting needs. Mrs. Shultz took that information to the Board in 2017, but at that time the Board tabled a decision since the County Commission voted to dissolve the District. At that time she also looked at outsourcing billing options. She stated that the Districts current software is out of date and the webpay software is not user friendly on the website, but staff has done all they can to work with the customer to accept payments. Mrs. Shultz commented that she has already began working with Charles Town on how to merge the data into their system since the consolidation is moving forward.

Mr. Forshee read a comment he received from a District customer that was not happy with the online bill paying. He would like to provide a reply to the sender with solutions the District is going to take. Mr. Compton suggested

he inform the customer that consolidation is moving forward and Charles Town's billing software will be utilized at that time. As an interim solution, he suggested possibly using screenshots of the online billing screens to walk the customer through the steps to pay online and include on the website.

Mrs. Stolipher stated that Charles Town uses a company called Tyler for their billing and accounting software.

Mr. Forshee stated he would like to see billing options improved rather than just hearing staff say they have tried to fix the billing issues. He would like to "kick the rudder" and have it going in that direction incase consolidation is delayed or doesn't occur. Mrs. Shultz stated that staff put a lot of time and effort into finding another software company which was presented to the Board last year, but no decisions were made to move forward with consolidation on the table. Mr. Forshee suggested Mrs. Shultz listen to the customers and Board to look for ways to improve known issues. She mentioned both staff and customers are not satisfied with webpay. Mrs. Shultz also stated that they have been working on the problem for years and Mr. Forshee expressed a concern with that and asked Mrs. Shultz to present solutions. She requested direction from the Board at this point in time.

Mr. Forshee commented that a GAP analysis sounds reasonable at this point in time. Mr. Compton stated that the District should wait to see what happens with consolidation. Mr. Forshee replied that his frustration is that staff has known about the issue for a long time and he doesn't want this issue to continue.

Mr. Milliron commented that the District has been dealing with aged equipment, vehicles, pump stations, and software. He stated that everything is currently operating, but requires upgrading when at the end of its useful life. Mr. Milliron realized that the software needs to be updated, but with the consolidation moving forward he wasn't sure how much money and effort the District should put into this. He questioned if there was any type of MOU or agreement with Charles Town that would expedite the use of their software.

Mrs. Shultz stated that the District's software system is terrible and she would welcome a new software system, as would staff, but it may not be the best option at this time. She is in the process of setting up a meeting with Charles Town to discuss transferring the billing and accounting to their system. The Board requested she update the Board at the next regular meeting.

Action: **Motion made by Mr. Forshee and seconded by Mr. Milliron to have an update from the General Manager on this issue next month. This will be a standing agenda item. Approved 2-0.**

Review and execute the general legal services representation letter dated July 23, 2018

Mrs. Shultz stated that last month the Board approved Mrs. Susan Riggs of Spilman Thomas & Battle, PLLC to represent the District for general legal services. Mrs. Riggs sent the Board a General Legal Services Representation Agreement to review and sign.

Action: **Motion made by Mr. Forshee and seconded by Mr. Milliron to sign the general services representation agreement dated July 1, 2018. Approved 2-0.**

Discuss employee/management training opportunities

Mr. Forshee requested this agenda item to initiate an employee training discussion. He asked if there was mandatory training for office staff. Mr. Freeze replied that all field staff have mandatory training/classes they take to keep their licenses current. Mrs. Shultz stated that the office staff does not have mandatory training they are required to take, but the yearly training budget allows for staff to pursue classes if they would like. Mr. Forshee then asked Mrs. Shultz if she had completed any training on the following topics;

- Utility Cases
- Financial Management & Funding Options
- Quality Based Selection of Engineers
- Open Government Meetings & Ethics Commission
- Parliamentary Procedures
- DEP
- Managing Risk
- Bureau for Public Health

- Asset Management
- Introduction to Municipal Bond Commission
- PSC Water & Sewer Rules

Mrs. Shultz stated she received training in some of the topics above, some she did not have training and the remaining she would have to look into her file since she has been employed with the District for so long. She stated she does have her Master's Degree. Mr. Forshee stated he thought it was a good opportunity for her to have the same training as the Board members and suggested she attend the next Board member seminar in Charleston. Mrs. Shultz stated that she is unable to attend the class in September, but could attend the next one.

Mrs. Riggs explained that the Public Service Commission will reply to training requests which could be an option for the District and possibly Charles Town to attend locally. Both Mr. Milliron and Mr. Forshee requested staff look into this and report their findings at the next regular meeting.

Mr. Milliron commented he thought it was great to see the staff options in the Charles Town due diligence package. He asked whether the staff should start training now for job opportunities at Charles Town. Mrs. Shultz explained that she and Mrs. Stolipher have discussed this have talked with staff about who would be interested at the water plant, collections systems or wastewater plant. Mrs. Stolipher explained that there are still a lot of unknowns with staffing and there would be different opportunities for employees regarding training and job placement. Mrs. Shultz mentioned that one of her staff could begin the training for the Class II water license since Charles Town's water plant is a Class II and obtain the license once he begins working at the plant. Mrs. Stolipher stated this class was recently offered locally so that individual may have to wait until it is offered locally again or the employee could travel away to take it which would incur travel costs.

Mr. Forshee suggested possibly job shadowing between the District and Charles Town employees and Mrs. Stolipher and Mrs. Shultz both agreed this would be a positive avenue to begin.

Action: No action required by the Board.

Discussion of any expenses over budget for the year

There were no items over budget. Mr. Forshee had a question regarding a line item on the June 30, 2018 Balance Sheet. The item was listed as Damage to Pump Station 1-12A for $3,700. Mrs. Shultz explained that this was the amount the District's insurance company didn't cover and staff attempted to recover from the individual, with no insurance, who hit the pump station, but was unable to collect after several attempts were made, including a signed payment agreement. This was recognized as an Accounts Receivable since the District intended to collect the money, but could now be written off since the money will most likely not be collected.

Mrs. Riggs stated that the District could take her to magistrate court if she could be found, but Mrs. Shultz stated legal costs would probably cost more to pursue a case.

Mr. Forshee also questioned what happens to other companies the District has judgements against, such as Commercial Associates. Mrs. Shultz explained that this flat rate customer, which is also owned by her brother-in-law's company, had their property taken by the bank leaving a $1000 unpaid bill. She stated that a judgement was placed on the property which is filed at the court house. The balance has since been wrote off, but the judgement is still on the property.

Action: No action required by the Board.

Approve monthly disbursements

Mr. Milliron requested that staff get a breakdown of hours and costs on the invoice from Cox Hollida & Professionals which listed services relating to the audit conducted by the Jefferson County Commission. He requested this amount, $879.00, be removed from the disbursement total until more information is received.

Action: Motion made by Mr. Milliron and seconded by Mr. Forshee to approve disbursements for Public Service District sewer expenses in the amount of $166,827.07. Approved 2-0.

Action: **Motion made by Mr. Milliron and seconded by Mr. Forshee to approve disbursements for the Public Service District water expenses in the amount of $8,248.63. Approved 2-0.**

Approve transfer of $6,896.36 from the New Sewer Security Deposit account to the Sewer Operating account for 72 security deposit refunds

Action: **Motion made by Mr. Milliron and seconded by Mr. Forshee to approve transfer of $6,896.36 from the New Sewer Security Deposit account to the Sewer Operating account for 72 security deposit refunds. Approved 2-0.**

Approve transfer of $91.97 from the Water Security Deposit account to the Water Operating account for 1 security deposit refund

Action: **Motion made by Mr. Milliron and seconded by Mr. Forshee to approve transfer of $91.97 from the Water Security Deposit account to the Water Operating account for 1 security deposit refund. Approved 2-0.**

Approve transfer of $1,563.42 from Renewal & Replacement account to the Sewer Operating account for new PLC at pump station 4-4

Action: **Motion made by Mr. Milliron and seconded by Mr. Forshee to approve transfer of $1,563.42 from the Renewal & Replacement account to the Sewer Operating account for new PLC at pump station 4-4. Approved 2-0.**

Update on Sewer Transmission Project 16-0616

Mr. Milliron requested this agenda item. He explained that given the recent appeal by the intervenors and new legal counsel, he thought it was a good idea to give a refresher on the approved sewer project and events that occurred. Mr. Milliron gave a chronology of events that occurred after the March, 2017 Public Service Commission approval of the project. Three key measures of the Project that may prove a hindrance if built: sufficient capacity after connecting Shenandoah Junction; rates associated with the project where not calculated since there were to be no new customers; and any significant changes in scope would require PSC approval. He also touched on the history of events and violations for Shenandoah Junction and history of the requests of Harvest Hills, both of which are intervenors in the appeal at the Supreme Court.

He noted that the reimbursement to developers in the past for building onsite system should no longer be considered, and in its place the use of main line extension agreements similar to that of Aspen Greens and Driswood Elementary School for both on and offsite sewer lines.

During his presentation, Mr. Milliron referenced a map of the District's system and discussed the current approved project along with multiple future projects that were listed in the Districts Strategic Plan. He questioned how the District address the developers concerns if the project is not completed and if they request service how the District will commit to that.

Mr. Milliron also mentioned that possibly there could be an alternative to the current sewer project the Board could consider so they aren't deemed negligent of not serving those developers. He explained that alternatives could include amending the current project, utilizing Baker Place, or working with Charles Town on alternative paths. He stated that developers could bring their requests/plans to the Board and actions can be taken, similar to the ones taken with Aspen Greens and Driswood Elementary for on/offsite infrastructure and Capacity Improvement Fees.

Mrs. Stolipher mentioned that Mr. Snyder requested service for Shenandoah Junction, but they passed that request to the District since the consolidation was not complete yet.

Mr. Forshee stated that since the District has no current customers in Shenandoah Junction, Mr. Snyder, an intervenor in the PSC project case, cannot argue that the Board is not supporting its current customers. He mentioned the same goes for Harvest Hills as well. Mr. Forshee stated he would like to focus on consolidation and making current customers a priority and not make any decisions to disrupt that.

Mr. Forshee questioned the District's current service request process and if there was a written process since the recent request from Shenandoah Junction was received. Mrs. Shultz stated that a written response should be sent back to Mr. Snyder with the District's intentions. She drafted a letter agreeing to service with contingency's which was reviewed by Mrs. Riggs and Charles Town and sent to the Board for review. Mrs. Riggs explained that she reworked the draft letter to explain the District is evaluating the request and make the request of a capacity study and inflow and infiltration study which would both be evaluated by the District. Also requested in the letter is for Shenandoah Junction to present an agreement where they would still be required to handle the O&M of their section of the system.

Mr. Forshee would like to use Charles Town's concept that if someone comes in for sewer service then they pay rather than the District paying for these costs. Mrs. Riggs agreed, but also believed it to just be a process of a public body as the District will recover in future revenue. Mr. Milliron stated that in the past the District used an engineer to review and evaluate these requests, but today this avenue is not readily available so the District will most likely have to get this request reviewed by an engineer to validate the evaluation. He would much rather have this validation done now then later.

Mr. Forshee also questioned a July letter from USDA which states if consolidation goes through then they would de-obligate the funding for the sewer project. Mrs. Stolipher stated that Charles Town would not be using a USDA loan for their sewer project.

Mr. Forshee requested to see the final letter before it gets sent to Shenandoah Junction. Mr. Milliron also requested that any type of agreement be signed off by the Board.

Action: No action required by the Board.

Update on JCPSD transition to City of Charles Town

- Discuss offering an Employee Assistance Program to District employees
- Discuss employee options for transition

Mrs. Shultz stated that she and Mrs. Stottlemyer met again with Jane Arnett, Utility Manager at Charles Town Utility Board, and Kristen Stolipher, Assistant Utility Manager, regarding the organizational structure and employee concerns. They will next discuss IT issues.

Mrs. Shultz explained that last month the Board also discussed a program offered by Magellan Healthcare that could provide employees (and families) assistance with a variety of issues or concerns in both their professional or personal lives. Currently Charles Town does not offer a program similar to this for their employees so the Board chose to drop from the agenda.

Also expressed last month was the consideration for the Board to offer severance packages to employees not interested in the merge to Charles Town. Mr. Freeze explained that he was aware of three employees, including himself, that would be interested in severance packages or at least pay for COBRA while they find other employment. Mrs. Shultz stated that she spoke with staff and was under the impression that all staff was satisfied with the exception of Mr. Freeze.

Mr. Forshee stated that each employee will be given a job at Charles Town and Mr. Milliron added that they are also offering training as well.

Mrs. Stolipher explained that she believed that the "two year employment period" described in the purchase agreement is being misconstrued as being negative when that is not the case. The intent was to be positive. She stated that every employee will be getting a slight increase in pay, offered career enhancements, and additional licenses.

Mr. Freeze stated that he does not want to be an operator in the wastewater plant at Charles Town like they would like for him to be and was hoping to retire in four years.

Mr. Compton commented that working with other companies, they did not offer severance packages to employees if they were offering employees employment at another company. Mr. Forshee agreed with Mr. Compton and stated that if you are getting employment at the merged company then doesn't see any evidence of providing a

severance package. Mr. Milliron commented that he appreciated staff and realized it has been a tough situation, but thanked them for their patience and working with Charles Town.

Action: No action required by the Board.

Update on Status of Current Public Service Commission Cases

- Jefferson County Commission PSC Case No. 17-0915-PSWD-PC consolidated with Complaint Case PSC no. 18-0006-PSD-C– Mrs. Riggs explained that the intervenors in that case filed a petition with the WV Supreme Court to appeal the final order. She requested to discuss the case further and a possible strategy with the Board in executive session.

Mr. Forshee questioned whether the recent issues with the West Virginia Supreme Court judges will have an impact on a decision from the courts. Mrs. Riggs replied they will have judges seated prior to the fall term and should not delay a decision. Mr. Forshee asked if a hearing would be warranted since one was not given in the initial PSC case rather than a memo by the courts. Mrs. Riggs explained that it is hard to say how the courts will react.

Mr. Freeze asked if Charles Town could do some sort of O&M agreement with the District as it did with Ranson if the appeal would hold up the consolidation. Mr. Forshee thought that was a good idea, but if consolidation doesn't happen then he wouldn't want to risk losing the good employees currently at the District. Mr. Compton mentioned that this item was not on the agenda for discussion.

Action: No action required by the Board.

General Manager's Report

In the General Manager's report this month, Mrs. Shultz informed the Board that staff received a quote from Snyder Environmental to replace piping at the Deerfield plant since they originally installed it. They will begin the work in a couple of weeks.

Mrs. Shultz also explained that she has been working with the new accounting firm, Yount Hyde and Barbour on the audit.

As far as the suspected inflow and infiltration at pump station 4-4, Mrs. Stolipher stated she would work with staff to address this concern.

Mr. Forshee questioned information he found on the EPA site regarding the District and its noncompliance on its permit over the years. Mr. Freeze explained that the noncompliance referred to the Royal Vendors Silver issue that was addressed and corrected. There was also a noncompliance report for Apple Valley Waste for their Total Suspended Solids that has also been corrected. Mr. Freeze stated that the four industrial users on the District's NPDES permit collect their own samples, complete the permit, and send to staff for review before they are submitted to the State.

Mr. Forshee requested that noncompliance issues be discussed in the General Manager's report in the future. Mr. Freeze stated that all permit reports are sent to Charles Town as well as the monthly grease trap inspections.

Action: No action required by the Board.

Other staff reports

Mr. Freeze informed the Board of a sewer backup concern called in by a District customer. He stated that staff checked the clean out on the property and saw no backup so suggested the customer contact a plumber to check inside the home.

Mr. Milliron thanked staff for noting on the agenda which Capacity Assurance Fee's from Beallair have applied for building permits and transferred to Capacity Improvement Fee's.

Action: No action required by the Board.

Correspondence

None discussed.

Action: No action required by the Board.

Public Comment

Jacquelyn Milliron provided the Board a map and the calculated flows of Shenandoah Junction from over the years she got from their annual reports that she provided to Charles Town. She asked if the District has ever had a WV DEP violation. Mrs. Milliron also mentioned that as far as the project goes, she recalled that over the years dealing with the PSC, particularly Ron Robertson who was very informative of Alternate Mainline Extension Agreements which need PSC approval. Also she stated that the rate effect of new customers on current customers is very important to the PSC. Mrs. Milliron commented that in regards to Shenandoah Junction, she is concerned with an agreement at this point in time and wouldn't want the District to do anything to ruin the consolidation.

Mrs. Milliron suggested that as an interim solution, staff may want to include screen shots for the webpay in the quarterly newsletter. She stated that she isn't sure why the District has the highest rates in the state and doesn't have a good billing system. Mrs. Milliron also commented that the PSC training was a good suggestion and may want to include the developers on that. She commented that Baker Place was mentioned in the February 2017 testimony of Andy Blake.

Mrs. Milliron also commented that she agreed with Mr. Forshee to hold off on an O&M agreement with Charles Town. She stated that the District is on the right track with consolidation. She reassured Mr. Freeze that she feels for him, but hope staff understands why customers are pushing for consolidation. Mrs. Milliron thanked staff and the Board for all their time and effort on the consolidation.

Action: **Motion made by Mr. Forshee and seconded by Mr. Milliron to convene into executive session to discuss the consolidated cases 17-0915-PSWD-PC and 18-0006-PSD-C. Approved 2-0.**

Action: **Motion made by Mr. Forshee and seconded by Mr. Milliron to return to public session. Approved 2-0.**

Action: **Motion made by Mr. Forshee and seconded by Mr. Milliron to approve the expenditure of 1/3 of $15,000 (which equals $5000 or less) for the purpose of a joint response brief to the Supreme Court Approved 2-0.**

Action: **Motion made by Mr. Forshee and seconded by Mr. Milliron to adjourn. Approved 2-0.**

There being no further business at this time, the meeting was adjourned at 10:50PM.

The next regular meeting is scheduled for Monday, September 10, 2018 at 7:00PM at 340 Edmond Road, Suite A at the Districts office in Kearneysville.

Respectfully Submitted,

Roger C. Forshee
Chairman

Tara D. Ashley
Secretary

MEMORANDUM

Re: Discuss the Districts financial status of paying bills

To: Jefferson County PSD Board Members & Professionals

Date: September 7, 2018

Preparers: April Shultz, General Manager

Background:

As of today, the District has the funds available to pay all of the August sewer disbursements and will need to collect $2450.00 before all of the previous water disbursements can be paid.

Action:

No action at this time.

MEMORANDUM

Re: Discuss pump station repairs, upgrades and related costs/funding options
- Update on repairs/upgrades to pump station 4-2
- Update on repairs needed for pump station 3-9
- Update on relocation of office generator

To: Jefferson County PSD Board Members & Professionals

Date: September 6, 2018

Preparers: April Shultz, General Manager

Background:

Pump Station 4-2
Last month the Board approved the quote from Marcum Pump for the repair/upgrade to this station. Since that time, Operations Manager, Mr. Freeze has asked Marcum Pump for a revised quote to include Ductile Iron rather than Schedule 80 per the suggestions of Charles Town.

The Board also approved last month the relining of the station with material that provides the best value and warranty not to exceed $20,000. Mr. Freeze received three quotes, one from Lyttle ($17,144), one from Core & Main ($17,284), and the last from Industrial Services Group ($41,300). Both Lyttle and Core & Main offer a 50 year life expectancy and a one year warranty.

Mr. Freeze does not have a preference and Kristen Stolipher from Charles Town recommended that we use Lyttle. Mr. Freeze has expressed concerns about putting new lining in the bottom of the wet well because of the issues that occurred at pump station 3-6. Mrs. Stolipher and the representative from Lyttle stated that the floor lining would not cause issues for Marcum Pump & Equipment during equipment removal & installation. Mr. Freeze stated that there will be an extra cost incurred if the floor lining has to be chipped away from existing equipment in order to do the replacement.

Pump Station 3-9
Staff ordered the new pumps last month. They should arrive within the next two weeks.

Office Generator
Last month the Board decided to leave the office generator at the office for now, but requested Mr. Freeze work with Charles Town's electrician to get a price to install a portable pump hookup at pump station 1-12. Mr. Freeze contacted the company Charles Town uses and waiting for a call back to schedule a site visit.

Action:
Staff is not aware of any action at this time.

MEMORANDUM

Re: Conduct annual evaluation of the General Manager

To: Jefferson County PSD Board Members & Professionals

Date: September 6, 2018

Preparers: Ashley Stottlemyer, Office Administrator

Background:
Chairman Forshee requested the Board conduct an evaluation of the General Manager, Mrs. Shultz. His initial request was for the July meeting, but Mrs. Shultz was on maternity leave until August 12th. She has requested the evaluation take place in public session.

Staff prepared their own written evaluations on Mrs. Shultz and she will present them to the Board at the meeting.

Action:
Staff is not aware of any action at this time.

MEMORANDUM

Re:	Discuss and possible action on sewer service request from Shenandoah Junction Public Sewer
To:	Jefferson County PSD Board Members & Professionals
Date:	September 6, 2018
Preparers:	April Shultz, General Manager

Background:
The District received a request for sewer service from Shenandoah Junction Public Sewer dated July 10, 2018. A copy of the request is behind this memo. Mrs. Shultz, with the help of the District's legal counsel, Susan Riggs, drafted a response commitment letter with contingencies. After much feedback from the Board, Mrs. Shultz felt the Board should discuss the sewer request and response.

Action:
The Board should take action on the sewer service request from Shenandoah Junction and provide a response.

Shenandoah Junction Public Sewer, Inc.

270 Industrial Boulevard
Kearneysville, West Virginia 25430
(304) 725-9140

July 10, 2018

Ms. April Shultz
General Manager
Jefferson County Public Service District
340 Edmond Road, Suite A
Kearneysville, WV 25430

Re: Sewer Service for Shenandoah Junction Public Sewer

Dear April:

Please find enclosed a letter I wrote on July 2, 2018 to Jane Arnett, Utility Manager of the Charles Town Utility Board regarding sewer service for Shenandoah Junction.

Kristen Stolipher, Assistant Utility Manager of the Charles Town Utility Board, has indicated that my request should be directed to the Public Service District. That being appropriate during this pendency of the sale of the JCPSD sewer system to the City of Charles Town.

My request remains as outlined in the letter. That is, that Shenandoah Junction Public Sewer be authorized to connect to the existing 6" force main on Route 20 in Shenandoah Junction. We would take care of the associated expense of the engineering, permitting and construction of the force main.

Please let me know if you need additional information.

Sincerely,

Lee Snyder

Lee Snyder, President

Enclosure

cc: Kristen Stolipher
Jane Arnett

Shenandoah Junction Public Sewer, Inc.

270 Industrial Boulevard
Kearneysville, West Virginia 25430
(304) 725-9140

July 2, 2018

Ms. Jane Arnett
City of Charles Town Utility Board
823 South George Street
Charles Town, WV 25414

Re: Connection of Shenandoah Junction Public Sewer Flows

Dear Jane:

As we have previously discussed, Shenandoah Junction Pubic Sewer is desirous of receiving wastewater treatment service from Charles Town by connection to the existing 6" force main located on Route 20 at First Street in Shenandoah Junction. The force main is about to be acquired by Charles Town in its acquisition of the JPSD system. As you know, this force main presently serves Jefferson High School, Wildwood Middle School and Harpers Ferry Job Corp. There already exists a tee and 6" valve on the branch which was installed at the time the force main was constructed for a potential tie in of Shenandoah Junction.

Our sewer billing volumes for the Shenandoah Junction System for the past 6 months are as follows:

January	587,070 gallons
February	530,040 gallons
March	548,670 gallons
April	513,510 gallons
May	591,710 gallons
June	530,660 gallons
Grand Total	3,301,660 gallons

For this six-month period, the flow averages 550,277gallons per month or 18,342 gallons per day.

I believe you indicated that Shenandoah Junction Public Sewer would be charged your resale rate which I understand to be $7.12/1,000 gallons.

We would prepare plans and obtain permits to make the connection. We would extend a 6" force main along First Street to the location of the existing WWTP. We would intend to temporarily locate the

pumps in an existing basin at the WWTP as an initial project and decommission the rest of the existing WWTP. Our long-term plan would be to locate a new pump station along Elk Branch Run on property owned by my brother.

This location for a pump station would allow gravity sewer service throughout the town, eliminating the existing 4 pump stations. This however, will take time to design, permit, fund and construct.

Operation and maintenance of the pump stations within Shenandoah Junction Public Sewer service area would remain the responsibility of the company.

We would propose that the monthly sewer bill for Shenandoah Junction Public Sewer payable to Charles Town be established by the total water sales to all of the customers receiving sewer service in Shenandoah Junction.

Please advise me of the City's position in this matter.

Sincerely,

Lee Snyder

Lee Snyder, President

cc: Kristen Stolipher, Assistant Utility Manager

MEMORANDUM

Re:	Discuss customer feedback from July 31, 2018 special meeting regarding Title 150 Sewer Rules
To:	Jefferson County PSD Board Members & Professionals
Date:	September 6, 2018
Preparers:	April Shultz, General Manager

Background:
Chairman, Roger Forshee requested this agenda item. At the District's July 31, 2018 special meeting, a District customer made the comment that the District was not utilizing Title 150 Sewer Rules when formalizing the sewer project and deferring service to Shenandoah Junction Public Sewer, Inc until after the project was completed. The basis for the comment is on page 78 in the attached November 2017 Public Service Commission documents.

Action:
Staff is not aware of any action at this time.

HANNA & HANNA PLLC
Attorneys at Law
1206 VIRGINIA STREET EAST, SUITE 201
CHARLESTON, WV 25301

MAILING ADDRESS:
P.O. BOX 3967
CHARLESTON, WV 25339

TELEPHONE (304) 342-1687
FAX (304) 342-8761
www.hannalawpllc.com

November 15, 2017

VIA HAND DELIVERY
Ronald Robertson, Jr., Esq.
Legal Division
Public Service Commission
201 Brooks Street
Charleston, WV 25301

12:43 PM NOV 15 2017 EXEC SEC DIV

Re: Case No. 17-1358-S-PC
SHENANDOAH JUNCTION PUBLIC SEWER, INC.
Petition for consent and approval for the imposition of a moratorium on the utility system.

Dear Mr. Robertson:

On behalf of Shenandoah Junction Public Sewer, Inc., I hand you the original **Shenandoah Junction Public Sewer, Inc.'s Response to Staff's First Request for Information**. I have also filed a copy with the Executive Secretary's Office as evidenced by the attached certificate of service.

If you have any questions, please contact me.

Sincerely,

David B. Hanna
WV State Bar # 8813
dhanna@hannalawpllc.com

DBH/dh
Enclosures
cc: I. Ferrell
L. Snyder

12:43 PM NOV 15 2017 EXEC SEC DIV

PUBLIC SERVICE COMMISSION
OF WEST VIRGINIA
CHARLESTON

CASE NO. 17-1358-S-PC

SHENANDOAH JUNCTION PUBLIC SEWER, INC.,
a public utility.
Petition for consent and approval for the imposition
of a moratorium on the utility system.

SHENANDOAH JUNCTION PUBLIC SEWER, INC.'S RESPONSE TO
STAFF'S FIRST REQUEST FOR INFORMATION

REQUEST NO. 1. Please provide copies of all operational reports filed with the WV DEP for operation of the Shenandoah Junction Public Sewer, Inc. (SJPS) treatment facility for the period of January 1, 2016 through the present.

RESPONSE: See attached Discharge Monitoring Reports.

RESPONSE PREPARED BY, AND WHO COULD TESTIFY: Lee Snyder, President of Shenandoah Junction Public Sewer, Inc.

DATE RESPONSE PREPARED: November 14, 2017

dep	Applicant: SJPS, INC. Reference ID: WVG550533 1st QT 2016 (04/18/2016) Status: New	Type: Electronic DMR Permit ID: New/Pending Printed: Apr. 18, 2016 2:45 PM

eDMR Worksheet

Permit WVG550533 Outlet No 001 Type Normal Reason

Lab Performing Analysis: 038 - HYDROCHEM LABORATORIES, INCO

Report for the Month of March Year 2016

Parameter	Permit Limits	Quarterly Avg	Quarterly Max	Quarterly Units	Quarterly Number Exceed	Other Units Min	Other Units Avg	Other Units Max	CEL*	Units	Number Exceed.	Measurement Frequency	Sample Type	Lab Test Flag
50050 (ML-1) RF-B Flow,In Conduit Or Treatment Plant	Reported							0.0058				1/quarter		999
Year Round	Permit Limits	N/A	N/A			N/A	N/A	0.018 Max. Daily		mgd	0	1/quarter	Estimated	
00310 (ML-B) RF-B Bod	Reported	1.4	2.1			29	43	43				1/wk 1/dly		038
		Rpt Only	Rpt Only	Lbs/Day	0	30	60	75		mg/l	0	1/quarter	Grab	
Year Round	Permit Limits	Avg. Monthly	Max. Daily			Avg. Monthly	Max. Daily	Inst. Max						
00530 (ML-A) RF-B Suspended Solids, Total	Reported	0.58	0.58			12	12	12				1/quarter		038
		Rpt Only	Rpt Only	Lbs/Day	0	30	60	75		mg/l	0	1/quarter	Grab	
Year Round	Permit Limits	Avg. Monthly	Max. Daily			Avg. Monthly	Max. Daily	Inst. Max						
74055 (ML-A) RF-B Coliform, Fecal	Reported					<4	<4	<4				1/quarter		038
		N/A	N/A			200	400	800		Cnts/100ml	0	1/quarter	Grab	
Year Round	Permit Limits					Mon. Geo. Mean	Max. Daily	Inst. Max						
00400 (ML-A) RF-B Ph	Reported					7.5		7.5				1/quarter		999
		N/A	N/A			6	N/A	9		S.U.	0	1/quarter	Grab	
Year Round	Permit Limits					Inst. Min		Inst. Max						
50060 (ML-A) RF-B Chlorine, Total Residual	Reported					<100	<100	<100				1/quarter		999
		N/A	N/A			28	57	70		ug/l	0	1/quarter	Grab	
Year Round	Permit Limits					Avg. Monthly	Max. Daily	Inst. Max						

eDMR Required Attachments

For municipal facilities, please provide the following attachments:

- Sludge Management Report (If required)
- Laboratory Results (Optional)
- Cover Letter (Optional)
- ES-59 (Health Dept. requirement - they will view thru our webportal)

For industrial facilities, please provide the following attachments:

- Laboratory Results (Optional)
- Cover Letter (Optional)

NOTE: To upload files or view previously uploaded files, click on the 'Attach/View Files' button at the upper right of the screen.

eDMR Worksheet Certification

I certify under penalty of law that this document and all attachments were prepared under the direction or supervision in accordance with a system designed to assure that qualified personnel properly gather and evaluate the information submitted. Based on my inquiry of the person or persons who manage the system, or those persons directly responsible for gathering the information, the information is, to the best of my knowledge and belief, true, accurate, and complete. I am aware that there are significant penalties for submitting false information including the possibility of a fine and imprisonment for knowing violations.

Name of Signee: Lee Snyder

Principal Executive Officer or Authorized Agent

Title: Manager

Date: 4/18/2016

dep	Applicant: SHENANDOAH JUNCTION PUBLIC SEWER, INC. Reference ID: WVG550533 2nd qt 2016 (07/18/2016) Status: New	Type: Electronic DMR Permit ID: New/Pending Printed: Jul. 18, 2016 7:11 AM

eDMR Worksheet

Permit: WVG550533 Outlet No: 001 Type: Normal

Report for the Month of: June Year: 2016

Lab Performing Analysis: 038 - HYDROCHEM LABORATORIES, INC

Parameter	Permit Limits	Quantity Avg	Quantity Max	Units	Number Exceed	Other Units Min	Other Units Avg	Other Units Max	CEL*	Units	Number Exceed	Measurement Frequency	Sample Type	Lab Test Flag
50050 (ML-1) RF-B Flow,In Conduit Or Treatment Plant	Reported							0.008				1/quarter		999
Year Round	Permit Limits	N/A	N/A			N/A	N/A	0.010 Max. Daily		mgd	0	1/quarter	Estimated	
00310 (ML-B) RF-B Bod	Reported	0.35	0.35			6.9	6.9	6.9				1/quarter		038
Year Round	Permit Limits	Rpt Only Avg. Monthly	Rpt Only Max. Daily	Lbs/Day	0	30 Avg. Monthly	60 Max. Daily	75 Inst. Max.		mg/l	0	1/quarter	Grab	
00530 (ML-A) RF-B Suspended Solids, Total	Reported	<0.08	<0.08			<1.5	<1.5	<1.5				1/quarter		038
Year Round	Permit Limits	Rpt Only Avg. Monthly	Rpt Only Max. Daily	Lbs/Day	0	30 Avg. Monthly	60 Max. Daily	75 Inst. Max.		mg/l	0	1/quarter	Grab	
74055 (ML-A) RF-B Coliform, Fecal	Reported					<4	<4	<4				1/quarter		038
Year Round	Permit Limits	N/A	N/A			200 Mon. Geo. Mean	400 Max. Daily	500 Inst. Max.		Cnts/100ml	0	1/quarter	Grab	
00400 (ML-A) RF-B Ph	Reported					7.3		7.3				1/quarter		999
Year Round	Permit Limits	N/A	N/A			6 Inst. Min.	N/A	9 Inst. Max.		S.U.	0	1/quarter	Grab	
50060 (ML-A) RF-B Chlorine, Total Residual	Reported					<100	<100	<100				1/quarter		999
Year Round	Permit Limits	N/A	N/A			28 Avg. Monthly	57 Max. Daily	70 Inst. Max.		ug/l	0	1/quarter	Grab	

eDMR Required Attachments

For municipal facilities, please provide the following attachments:

- Sludge Management Report (If required)
- Laboratory Results (Optional)
- Cover Letter (Optional)
- ES-59 (Health Dept. requirement - they will view thru our webportal)

For industrial facilities, please provide the following attachments:

- Laboratory Results (Optional)
- Cover Letter (Optional)

NOTE: To upload files or view previously uploaded files, click on the 'Attach/View Files' button at the upper right of the screen.

eDMR Worksheet Certification

I certify under penalty of law that this document and all attachments were prepared under the direction or supervision in accordance with a system designed to assure that qualified personnel properly gather and evaluate the information submitted. Based on my inquiry of the person or persons who manage the system, or those persons directly responsible for gathering the information, the information is, to the best of my knowledge and belief, true, accurate, and complete. I am aware that there are significant penalties for submitting false information, including the possibility of a fine and imprisonment for knowing violations.

Name of Signer: Lee Snyder

Principal Executive Officer or Authorized Agent

Title: Manager

Date: 7/18/2016

dep	Applicant: SHENANDOAH JUNCTION PUBLIC SEWER, INC. Reference ID: WVG550533 3rd QT 2016 (10/05/2016) Status: ERIS - Closed - Issued	Type: Electronic DMR #54068 Permit ID: EDMR54068 Printed: Nov. 06, 2017 3:50 PM

eDMR Worksheet

Permit: WVG550533 Outlet No: 001 Type: Normal
Report for the Month of: September Year: 2016

Lab Performing Analysis: 181 - RELIANCE LABORATORIES - MARTIN

Parameter	Permit Limits	Quantity Avg	Quantity Max	Quantity Units	Quantity Number Exceed	Other Units Min	Other Units Avg	Other Units Max	CEL*	Units	Number Exceed	Measurement Frequency	Sample Type	Lab Test Flag
50050 (ML-1) RF-B Flow In Conduit Or Treatment Plant Year Round	Reported							0.0048				1/quarter	Estimated	999
	Permit Limits	N/A	N/A			N/A	N/A	0.018 Max. Daily		mgd	0	1/quarter		
00310 (ML-B) RF-B Boron Year Round	Reported	1.4	1.4	Lbs/Day	0	37	37	37		mg/l	1	1/quarter	Grab	181
	Permit Limits	Rpt Only Avg. Monthly	Rpt Only Max. Daily			30 Avg. Monthly	60 Max. Daily	75 Inst. Max.				1/quarter		
00530 (ML-A) RF-B Suspended Solids, Total Year Round	Reported	0.19	0.19	Lbs/Day	0	5	5	5		mg/l	0	1/quarter	Grab	181
	Permit Limits	Rpt Only Avg. Monthly	Rpt Only Max. Daily			30 Avg. Monthly	60 Max. Daily	75 Inst. Max.				1/quarter		
74055 (ML-A) RF-B Coliform, Fecal Year Round	Reported					<3	<3	<3		Cnts/100ml	0	1/quarter	Grab	181
	Permit Limits	N/A	N/A			200 Mon. Geo. Mean	400 Max. Daily	500 Inst. Max.				1/quarter		
00400 (ML-A) RF-B Ph Year Round	Reported					7.85		7.85		S.U.		1/quarter	Grab	999
	Permit Limits	N/A	N/A			6 Inst. Min.	N/A	9 Inst. Max.				1/quarter		
50060 (ML-A) RF-B Chlorine, Total Residual Year Round	Reported					<100	<100	<100		ug/l		1/quarter	Grab	999
	Permit Limits	N/A	N/A			28 Avg. Monthly	57 Max. Daily	70 Inst. Max.				1/quarter		

eDMR Required Attachments

For municipal facilities, please provide the following attachments:

- Sludge Management Report (If required)
- Laboratory Results (Optional)
- Cover Letter (Optional)
- ES-59 (Health Dept. requirement - they will view thru our webportal)

For industrial facilities, please provide the following attachments:

- Laboratory Results (Optional)
- Cover Letter (Optional)

NOTE: To upload files or view previously uploaded files, click on the 'Attach/View Files' button at the upper right of the screen

eDMR Worksheet Certification

I certify under penalty of law that this document and all attachments were prepared under the direction or supervision in accordance with a system designed to assure that qualified personnel properly gather and evaluate the information submitted. Based on my inquiry of the person or persons who manage the system, or those persons directly responsible for gathering the information, the information is, to the best of my knowledge and belief, true, accurate, and complete. I am aware that there are significant penalties for submitting false information including the possibility of a fine and imprisonment for knowing violations.

Name of Signee: Lee Snyder
Principle Executive Officer or Authorized Agent
Title: Manager
Date: 10/7/2016

dep	**Applicant: SHENANDOAH JUNCTION PUBLIC SEWER, INC.** **Reference ID: WVG550533 4th QT 2016 (01/20/2017)** **Status: ERIS - Closed - Issued**	**Type: Electronic DMR #56568** **Permit ID: EDMR56568** Printed: Mar. 30, 2017 9:14 AM

eDMR Worksheet

Permit: WVG550533 Outlet No: 001 Type: Normal
Report for the Month of: December Year: 2016

Lab Performing Analysis: 038 - HYDROCHEM LABORATORIES, INCORP

Parameter	Permit Limits	Quantity Avg	Quantity Max	Quantity Units	Quantity Number Exceed.	Other Units Min	Other Units Avg	Other Units Max	Other Units CEL*	Other Units Units	Other Units Number Exceed.	Measurement Frequency	Sample Type	Lab Test Flag
50050 (ML-1) RF-B	Reported							0.0065				1/quarter		999
Flow,In Conduit Or Treatment Plant		N/A	N/A			N/A	N/A	0.018		mgd	0	1/quarter	Estimated	
Year Round	Permit Limits							Max. Daily						
00310 (ML-B) RF-B	Reported	0.23	0.39			3.7	7.1	7.1				five/qrtly		038
Bod		Rpt Only	Rpt Only	Lbs/Day	0	10	20	25		mg/l	0	1/quarter	Grab	
Winter Nov 1-Apr 30	Permit Limits	Avg. Month	Max. Daily			Avg. Month	Max. Daily	Inst. Max.						
00530 (ML-A) RF-B	Reported	0.44	0.69			6.8	10	10				five/qrtly		038
Suspended Solids, Total		Rpt Only	Rpt Only	Lbs/Day	0	30	60	75		mg/l	0	1/quarter	Grab	
Year Round	Permit Limits	Avg. Month	Max. Daily			Avg. Month	Max. Daily	Inst. Max.						
74055 (ML-A) RF-B	Reported					5	3.8	3.8				1/quarter		038
Coliform, Fecal		N/A	N/A			200	400	509		Cfu/100ml	0	1/quarter	Grab	
Year Round	Permit Limits					Mon. Geo	Max. Daily	Inst. Max						
00400 (ML-A) RF-B	Reported					7.4		7.4				1/quarter		999
Ph		N/A	N/A			6	N/A	9		S.U.	0	1/quarter	Grab	
Year Round	Permit Limits					Inst. Min		Inst. Max.						
00300 (ML-A) RF-B	Reported					7						1/quarter		999
Dissolved Oxygen		N/A	N/A			6	N/A	N/A		mg/l	0	1/quarter	Grab	
Year Round	Permit Limits					Inst. Min								
00610 (ML-A) RF-B	Reported											1/quarter		038
Nitrogen, Ammonia Total		Rpt Only	Rpt Only	Lbs/Day		6	12	15		mg/l		1/quarter	Grab	Not Analyzed
Winter Nov 1-Apr 30	Permit Limits	Avg. Month	Max. Daily			Avg. Month	Max. Daily	Inst. Max.						
50060 (ML-1) RF-B	Reported					<100	<100	<100				1/quarter		999
Chlorine, Total Residual		N/A	N/A			28	57	70		mg/l	0	1/quarter	Grab	
Year Round	Permit Limits					Avg. Month	Max. Daily	Inst. Max						

eDMR Required Attachments

For municipal facilities, please provide the following attachments:

- Sludge Management Report (If required)
- Laboratory Results (Optional)
- Cover Letter (Optional)
- ES-59 (Health Dept. requirement - they will view thru our webportal)

For industrial facilities, please provide the following attachments:

- Laboratory Results (Optional)
- Cover Letter (Optional)

NOTE: To upload files or view previously uploaded files, click on the 'Attach/View Files' button at the upper right of the screen.

eDMR Worksheet Certification

I certify under penalty of law that this document and all attachments were prepared under the direction or supervision in accordance with a system designed to assure that qualified personnel properly gather and evaluate the information submitted. Based on my inquiry of the person or persons who mange the system, or those persons directly responsible for gathering the information, the information is, to the best of my knowledge and belief, true, accurate, and complete. I am aware that there are significant penalties for submitting false information including the possibility of a fine and imprisonment for knowing violations.

Name of Signer: lee snyder
Principal Executive Officer or Authorized Agent
Title: manager
Date: 1/20/2017

dep	**Applicant: SHENANDOAH JUNCTION PUBLIC SEWER, INC.** **Reference ID: WVG550533 1st QT 2017 (04/19/2017)** **Status: New**	**Type: Electronic DMR** **Permit ID: New/Pending** Printed: Apr. 20, 2017 3:50 PM

eDMR Worksheet

Permit: WVG550533 Outlet No: 001 Type: Normal
Report for the Month of: March Year: 2017

Lab Performing Analysis: 038 - MOUNTAIN RESEARCH, LLC-HYDROC

Parameter	Permit Limits	Quantity Avg	Quantity Max	Quantity Units	Quantity Number Exceed.	Other Units Min	Other Units Avg	Other Units Max	CEL*	Other Units Units	Other Units Number Exceed.	Measurement Frequency	Sample Type	Lab Test Flag
50050 (ML-1) RF-B	Reported							0.0114				3/week/quarter		999
Flow, In Conduit Or Treatment Plant		N/A	N/A			N/A	N/A	0.018		mgd	0	1/quarter	Estimated	
Year Round	Permit Limits							Max. Daily						
00310 (ML-B) RF-B	Reported	1.06	1.52			24	44	44				3/week/quarter		038
Bod		Rpt Only	Rpt Only	Lbs/Day	0	10	20	25		mg/l	0	1/quarter	Grab	
Winter Nov 1-Apr 30	Permit Limits	Avg. Month	Max. Daily			Avg. Month	Max. Daily	Inst. Max.						
00530 (ML-A) RF-B	Reported	0.24	0.24			6	6	6				1/quarter		038
Suspended Solids, Total		Rpt Only	Rpt Only	Lbs/Day	0	30	60	75		mg/l	0	1/quarter	Grab	
Year Round	Permit Limits	Avg. Month	Max. Daily			Avg. Month	Max. Daily	Inst. Max.						
74055 (ML-A) RF-B	Reported					<3.07	<3.07	<3.07				1/quarter		038
Coliform, Fecal		N/A	N/A			200	400	500		Cnts/100ml	0	1/quarter	Grab	
Year Round	Permit Limits					Mon. Geo	Max. Daily	Inst. Max.						
00400 (ML-A) RF-B	Reported					7		7.2				1/wkd qtrly		999
Ph		N/A	N/A			6	N/A	9		S.U.	0	1/quarter	Grab	
Year Round	Permit Limits					Inst. Min.		Inst. Max.						
00300 (ML-A) RF-B	Reported					4.2						1/quarter		999
Dissolved Oxygen		N/A	N/A			6	N/A	N/A		mg/l	1	1/quarter	Grab	
Year Round	Permit Limits					Inst. Min.								
00610 (ML-A) RF-B	Reported											1/quarter		038
Nitrogen, Ammonia Total		Rpt Only	Rpt Only	Lbs/Day		6	12	15		mg/l		1/quarter	Grab	Not Analyzed
Winter Nov 1-Apr 30	Permit Limits	Avg. Month	Max. Daily			Avg. Month	Max. Daily	Inst. Max.						
50060 (ML-1) RF-B	Reported					<100	<100	<100				1/quarter		999
Chlorine, Total Residual		N/A	N/A			28	57	70		ug/l	0	1/quarter	Grab	
Year Round	Permit Limits					Avg. Month	Max. Daily	Inst. Max.						

eDMR Required Attachments

For municipal facilities, please provide the following attachments:

- Sludge Management Report (If required)
- Laboratory Results (Optional)
- Cover Letter (Optional)
- ES-59 (Health Dept. requirement - they will view thru our webportal)

For industrial facilities, please provide the following attachments:

- Laboratory Results (Optional)
- Cover Letter (Optional)

NOTE: To upload files or view previously uploaded files, click on the 'Attach/View Files' button at the upper right of the screen

eDMR Worksheet Certification

I certify under penalty of law that this document and all attachments were prepared under the direction or supervision in accordance with a system designed to assure that qualified personnel properly gather and evaluate the information submitted. Based on my inquiry of the person or persons who mange the system, or those persons directly responsible for gathering the information, the information is, to the best of my knowledge and belief, true, accurate, and complete. I am aware that there are significant penalties for submitting false information including the possibility of a fine and imprisonment for knowing violations.

Name of Signee: Lee Snyder
Principal Executive Officer or Authorized Agent

Title: Manager

Date: 4/20/2017

dep	Applicant: SHENANDOAH JUNCTION PUBLIC SEWER, INC. Reference ID: WVG550533 2nd QT 2017 Jct wwtp (07/20/2017) Status: New	Type: Electronic DMR Permit ID: New/Pending Printed: Jul. 21, 2017 11:09 AM

eDMR Worksheet

Permit: WVG550533 Outlet No: 001 Type: Normal Reason:

Report for the Month of: June Year: 2017

Lab Performing Analysis: 038 - MOUNTAIN RESEARCH, LLC-HYDRO

Parameter	Permit Limits	Quantity Avg	Quantity Max	Units	Number Exceed	Other Units Min	Other Units Avg	Other Units Max	CEL*	Units	Number Exceed	Measurement Frequency	Sample Type	Lab Test Flag
50050 (ML-1) RF-B	Reported							0.0042				1/quarter		939
Flow in Conduit Or Treatment Plant		N/A	N/A			N/A	N/A	0.018		mgd	0	1/quarter	Estimated	
Year Round	Permit Limits							Max Daily						
00310 (ML-B) RF-B	Reported	0.13	0.13			3.9	3.9	3.9				1/quarter		038
Bod		Rpt Only	Rpt Only	Lbs/Day	0	5	10	12.5		mg/l	0	1/quarter	Grab	
Summer May 1-Oct 31	Permit Limits	Avg Monthly	Max Daily			Avg Monthly	Max Daily	Inst Max						
00530 (ML-A) RF-B	Reported	<0.09	<0.09			<2.5	<2.5	<2.5				1/quarter		038
Suspended Solids Total		Rpt Only	Rpt Only	Lbs/Day	0	30	60	75		mg/l	0	1/quarter	Grab	
Year Round	Permit Limits	Avg Monthly	Max Daily			Avg Monthly	Max Daily	Inst Max						
74055 (ML-A) RF-B	Reported					<2	<2	<2				1/quarter		038
Coliform, Fecal		N/A	N/A			200	400	500		Cols/100ml	0	1/quarter	Grab	
Year Round	Permit Limits					Mon. Geo. Mean	Max Daily	Inst Max						
00400 (ML-A) RF-B	Reported					7.4		7.4				1/quarter		989
Ph		N/A	N/A			5	N/A	9		S.U.	0	1/quarter	Grab	
Year Round	Permit Limits					Inst Min		Inst Max						
00300 (ML-A) RF-B	Reported					5.2						1/quarter		939
Dissolved Oxygen		N/A	N/A			6	N/A	N/A		mg/l	0	1/quarter	Grab	
Year Round	Permit Limits					Inst Min								
00610 (ML-A) RF-B	Reported	<0.02	<0.02			<0.5	<0.5	<0.5				1/quarter		038
Nitrogen, Ammonia Total		Rpt Only	Rpt Only	Lbs/Day	0	3	6	7.5		mg/l	0	1/quarter	Grab	
Summer May 1-Oct 31	Permit Limits	Avg Monthly	Max Daily			Avg Monthly	Max Daily	Inst Max						
50060 (ML-1) RF-B	Reported					<100	<100	<100				1/quarter		939
Chlorine, Total Residual		N/A	N/A			28	57	70		ug/l	0	1/quarter	Grab	
Year Round	Permit Limits					Avg Monthly	Max Daily	Inst Max						

eDMR Required Attachments

For municipal facilities, please provide the following attachments:

- Sludge Management Report (If required)
- Laboratory Results (Optional)
- Cover Letter (Optional)
- ES-59 (Health Dept. requirement - they will view thru our webportal)

For industrial facilities, please provide the following attachments:

- Laboratory Results (Optional)
- Cover Letter (Optional)

NOTE: To upload files or view previously uploaded files, click on the 'Attach/View Files' button at the upper right of the screen.

eDMR Worksheet Certification

I certify under penalty of law that this document and all attachments were prepared under the direction or supervision in accordance with a system designed to assure that qualified personnel properly gather and evaluate the information submitted. Based on my inquiry of the person or persons who mange the system, or those persons directly responsible for gathering the information, the information is, to the best of my knowledge and belief, true, accurate, and complete. I am aware that there are significant penalties for submitting false information including the possibility of a fine and imprisonment for knowing violations.

Name of Signee: Lee Snyder

Principal Executive Officer or Authorized Agent

Title: Manager

Date: 7/20/2017

dep	Applicant: SHENANDOAH JUNCTION PUBLIC SEWER, INC. Reference ID: WVG550533 3rd QT 2017 jct wwtp (10/18/2017) Status: New	Type: Electronic DMR Permit ID: New/Pending Printed: Oct. 19, 2017 9:10 AM

eDMR Worksheet

Permit: WVG550533 Outlet No: 001 Type: Normal

Report for the Month of: September Year: 2017

Lab Performing Analysis: 038 - MOUNTAIN RESEARCH, LLC- HYDRO

Parameter	Permit Limits	Quantity Avg	Quantity Max	Units	Number Exceed	Other Units Min	Other Units Avg	Other Units Max	CEL*	Units	Number Exceed	Measurement Frequency	Sample Type	Lab Test Flag
50050 (ML-1) RF-B Flow, In Conduit Or Treatment Plant	Reported							0.003578		mgd	0	1/quarter	Estimated	999
Year Round	Permit Limits	N/A	N/A			N/A	N/A	0.016 Max. Daily				1/quarter		
00310 (ML-B) RF-B Bod	Reported	0.11	0.11			3.5	3.5	3.5		mg/l	0	1/quarter	Grab	038
Summer May 1-Oct 31	Permit Limits	Rpt Only Avg. Monthly	Rpt Only Max. Daily	Lbs/Day	0	5 Avg. Monthly	10 Max. Daily	12.5 Inst. Max				1/quarter		
00530 (ML-A) RF-B Suspended Solids, Total	Reported	<3.05	<3.05			<1.68	<1.68	<1.68		mg/l	0	1/quarter	Grab	038
Year Round	Permit Limits	Rpt Only Avg. Monthly	Rpt Only Max. Daily	Lbs/Day	0	20 Avg. Monthly	60 Max. Daily	75 Inst. Max				1/quarter		
74055 (ML-A) RF-B Coliform, Fecal	Reported					1	1	1		Cnt/100ml	0	1/quarter	Grab	038
Year Round	Permit Limits	N/A	N/A			200 Mon. Geo. Mean	400 Max. Daily	500 Inst. Max.				1/quarter		
00400 (ML-A) RF-B Ph	Reported					7.4		7.4		S.U.	0	1/quarter	Grab	999
Year Round	Permit Limits	N/A	N/A			6 Inst. Min	N/A	9 Inst. Max				1/quarter		
00300 (ML-A) RF-B Dissolved Oxygen	Reported					5.6				mg/l	1	1/quarter	Grab	999
Year Round	Permit Limits	N/A	N/A			6 Inst. Min	N/A	N/A				1/quarter		
00610 (ML-A) RF-B Nitrogen, Ammonia Total	Reported	<0.01	<0.01			<0.5	<0.5	<0.5		mg/l	0	1/quarter	Grab	038
Summer May 1-Oct 31	Permit Limits	Rpt Only Avg. Monthly	Rpt Only Max. Daily	Lbs/Day	0	3 Avg. Monthly	8 Max. Daily	7.5 Inst. Max				1/quarter		
50060 (ML-1) RF-B Chlorine, Total Residual	Reported					<100	<100	<100		ug/l	0	1/quarter	Grab	999
Year Round	Permit Limits	N/A	N/A			28 Avg. Monthly	57 Max. Daily	70 Inst. Max				1/quarter		

eDMR Required Attachments

For municipal facilities, please provide the following attachments:

- Sludge Management Report (If required)
- Laboratory Results (Optional)
- Cover Letter (Optional)
- ES-59 (Health Dept. requirement - they will view thru our webportal)

For industrial facilities, please provide the following attachments:

- Laboratory Results (Optional)
- Cover Letter (Optional)

NOTE: To upload files or view previously uploaded files, click on the 'Attach/View Files' button at the upper right of the screen.

eDMR Worksheet Certification

I certify under penalty of law that this document and all attachments were prepared under the direction or supervision in accordance with a system designed to assure that qualified personnel properly gather and evaluate the information submitted. Based on my inquiry of the person or persons who manage the system, or those persons directly responsible for gathering the information, the information is, to the best of my knowledge and belief, true, accurate, and complete. I am aware that there are significant penalties for submitting false information including the possibility of a fine and imprisonment for knowing violations.

Name of Signer: Lea Snyder

Principal Executive Officer or Authorized Agent

Title: Manager

Date: 10/18/2017

REQUEST NO. 2. Provide a copy of the current NPDES Permit for this facility.

RESPONSE: See attached General Permit Number WV0103110, Registration Number WVG550533.

RESPONSE PREPARED BY, AND WHO COULD TESTIFY: Lee Snyder, President of Shenandoah Junction Public Sewer, Inc.

DATE RESPONSE PREPARED: November 14, 2017

STATE OF WEST VIRGINIA
DEPARTMENT OF ENVIRONMENTAL PROTECTION
DIVISION OF WATER & WASTE MANAGEMENT
601 57th Street, S.E.
CHARLESTON, WV 25304

GENERAL
NATIONAL POLLUTANT DISCHARGE ELIMINATION SYSTEM
WATER POLLUTION CONTROL PERMIT

Permit No.: WV0103110

Subject: Sewage Treatment and Disposal Systems of Domestic Sewage Only (50,000 GPD or less, except mine bathhouses.)

Issue Date: October 1, 2015

Effective Date: November 1, 2015

Expiration Date: September 30, 2020

Supersedes: WV/NPDES General Water Pollution Control Permit No. WV0103110 issued September 24, 2010.

To whom it may concern:

This is to certify that any entity to be regulated under the terms and conditions of this general permit, and who has satisfied the registration requirements and has been assigned a Treatment Category, and who has not been required by the Division of Water and Waste Management to apply for an individual WV/NPDES permit, is hereby granted coverage under this General WV/NPDES Water Pollution Control Permit to install, operate, and maintain a disposal system or part thereof, for the direct discharge of treated sewage into the waters of the State.

This permit is subject to the following terms and conditions:

The information submitted on and with the Facility Registration/Application Form or any information presently incorporated in the permittees' previous WV/NPDES permits is hereby incorporated with like effect as if all such information was set forth herein, and other conditions set forth in Sections A, B, and C, and Appendix A, and the conditions set forth in the site approval coverage letter.

The validity of this permit is contingent upon the payment of the applicable annual permit fee, as required by Chapter 22, Article 11, Section 10 of the Code of West Virginia.

A. Discharge Limitations and Monitoring Requirements

Permittees must provide adequate treatment technologies in order to comply with the prescribed effluent limitations of their assigned treatment category and the allowed maximum daily flow.

A.1 Discharge Limitations and Monitoring Requirements - *Treatment Category I*

During the period beginning on the effective date of this permit and lasting through the expiration date of this permit, permittees who have been assigned to Treatment Category I are authorized to discharge from the point source. The discharge shall comply with the following:

	Discharge Limitations						Monitoring Requirements	
	Quantity (lbs/day)		Other Units (Specify)					
Effluent Characteristic	**Avg. Monthly**	**Max. Daily**	**Avg. Monthly**	**Max.Daily**	**Instantaneous Maximum**		**Measurement Frequency**	**Sample Type**
Flow				*As Authorized		MGD	1/Quarter	Estimated
Biochemical Oxygen Demand (5-Day)	Report Only	Report Only	30.0	60.0	75.0	mg/l	1/Quarter	Grab
Total Suspended Solids	Report Only	Report Only	30.0	60.0	75.0	mg/l	1/Quarter	Grab
Fecal Coliform			200	400	500	counts/ 100ml	1/Quarter	Grab
Total Residual Chlorine (TRC)			28.0	57.0	70.0	µg/l	**1/Quarter	Grab

* As authorized on General Permit Registration

** Monitoring for TRC is required only if a chlorination or a chlorination/dechlorination system is used for bacteria disinfection. Permittee shall test on-site utilizing an EPA approved field test kit having an accuracy detection level down to 20 µg/l. Also see condition B.16.

Sewage facilities subject to Treatment Category I are required to provide Secondary Treatment Technology such as an extended aeration "package" sewage treatment plant or a sewage stabilization pond or constructed subsurface wetland or equivalent secondary treatment technology. Bacteria disinfection shall be accomplished through the use of a chlorine or an ultraviolet disinfection system; however, should chlorine disinfection be utilized, a dechlorination system shall be provided.

The pH shall not be less than 6.0 **standard units and not more than** 9.0 **standard units and shall be monitored by grab sampling quarterly.**

Samples taken in compliance with the monitoring requirements specified above shall be taken at the following location(s): Effluent BOD_5 sampling shall be collected at a location immediately preceding disinfection. All other effluent samples shall be collected at or as near as possible to the point of discharge.

This discharge shall not cause violation of Title 47, Series 2, Section 3, of the West Virginia Legislative Rules issued pursuant to Chapter 22B, Article 3.

A.1A Discharge Limitations and Monitoring Requirements - *Treatment Category IA*

During the period beginning on the effective date of this permit and lasting through the expiration date of this permit, permittees who have been assigned to Treatment Category IA are authorized to discharge from the point source. The discharge shall comply with the following:

	Discharge Limitations						Monitoring Requirements	
	Quantity (lbs/day)		Other Units (Specify)					
Effluent Characteristic	**Avg. Monthly**	**Max. Daily**	**Avg. Monthly**	**Max.Daily**	**Instantaneous Maximum**		**Measurement Frequency**	**Sample Type**
Flow				*As Authorized		MGD	1/Quarter	Estimated
Biochemical Oxygen Demand (5-Day)	Report Only	Report Only	30.0	60.0	75.0	mg/l	1/Quarter	Grab
Total Suspended Solids	Report Only	Report Only	30.0	60.0	75.0	mg/l	1/Quarter	Grab
Fecal Coliform			200	400	500	counts/ 100ml	1/Quarter	Grab
Total Residual Chlorine(TRC)			Zero	Zero	Zero	µg/l	**1/Quarter	Grab

* As authorized on General Permit Registration

** Monitoring for TRC is required only if a chlorination or a chlorination/dechlorination system is used for bacteria disinfection. Permittee shall test on-site utilizing an EPA approved field test kit having an accuracy detection level down to 20 µg/l. Also see condition B.16.

Sewage facilities subject to Treatment Category IA are required to provide Secondary Treatment Technology such as an extended aeration "package" sewage treatment plant or a sewage stabilization pond or constructed subsurface wetland or equivalent secondary treatment technology. Bacteria disinfection shall be accomplished through the use of a chlorine or an ultraviolet disinfection system; however, should chlorine disinfection be utilized, a dechlorination system shall be provided.

The pH shall not be less than 6.0 **standard units and not more than** 9.0 **standard units and shall be monitored by grab sampling quarterly.**

Samples taken in compliance with the monitoring requirements specified above shall be taken at the following location(s): Effluent BOD_5 sampling shall be collected at a location immediately preceding disinfection. All other effluent samples shall be collected at or as near as possible to the point of discharge.

This discharge shall not cause violation of Title 47, Series 2, Section 3, of the West Virginia Legislative Rules issued pursuant to Chapter 22B, Article 3.

A.2 Discharge Limitations and Monitoring Requirements - *Treatment Category II*

During the period beginning on the effective date of this permit and lasting through the expiration date of this permit, permittees who have been assigned to Treatment Category II are authorized to discharge from the point source. The discharge shall comply with the following: (Summer Limitations are applicable May 1 - October 31 and Winter Limitations are applicable November 1 - April 30)

	Discharge Limitations						Monitoring Requirements	
	Quantity (lbs/day)		Other Units (Specify)					
Effluent Characteristic	**Avg. Monthly**	**Max. Daily**	**Avg. Monthly**	**Max.Daily**	**Instantaneous Maximum**		**Measurement Frequency**	**Sample Type**
Flow				*As Authorized		MGD	1/Quarter	Estimated
Biochemical Oxygen Demand (5-Day)	Report Only	Report Only	Summer 10.0 Winter 20.0	20.0 40.0	25.0 50.0	mg/l	1/Quarter	Grab
Total Suspended Solids	Report Only	Report Only	30.0	60.0	75.0	mg/l	1/Quarter	Grab
Nitrogen, Ammonia	Report Only	Report Only	Summer 8.0 Winter 15.0	16.0 30.0	20.0 37.5	mg/l	1/Quarter	Grab
Fecal Coliform			200	400	500	counts/ 100ml	1/Quarter	Grab
Dissolved Oxygen			Not less than 6.0 mg/l at any given time			mg/l	1/Quarter	Grab
Total Residual Chlorine (TRC)			28.0	57.0	70.0	µg/l	**1/Quarter	Grab

* As authorized on General Permit Registration

** Monitoring for TRC is required only if a chlorination or a chlorination/dechlorination system is used for bacteria disinfection. Permittee shall test on-site utilizing an EPA approved field test kit having an accuracy detection level down to 20 µg/l. Also see condition B.16.

Sewage facilities subject to Treatment Category II are required to provide secondary treatment technology followed by additional treatment such as an alternating surface sand filter or a rapid sand filter or a polishing pond or equivalent tertiary technology. Also acceptable is a Recirculating Sand Filter (RSF), preceded by primary or secondary treatment technology provided the RSF is designed for type of pretreated waste received. Bacteria disinfection shall be accomplished through the use of a chlorine or an ultraviolet disinfection system; however, should chlorine disinfection be utilized, a dechlorination system shall be provided. If necessary, post aeration of the final effluent shall be required, should a polishing pond not be provided.

The pH shall not be less than 6.0 **standard units and not more than** 9.0 **standard units and shall be monitored by grab sampling quarterly.**

Samples taken in compliance with the monitoring requirements specified above shall be taken at the following location(s): Effluent BOD_5 sampling shall be collected at a location immediately preceding disinfection. All other effluent samples shall be collected at or as near as possible to the point of discharge.
This discharge shall not cause violation of Title 47, Series 2, Section 3, of the West Virginia Legislative Rules issued pursuant to Chapter 22B, Article 3.

A.2A Discharge Limitations and Monitoring Requirements - *Treatment Category IIA*

During the period beginning on the effective date of this permit and lasting through the expiration date of this permit, permittees who have been assigned to Treatment Category IIA are authorized to discharge from the point source. The discharge shall comply with the following: (Summer Limitations are applicable May 1 - October 31 and Winter Limitations are applicable November 1 - April 30)

	Discharge Limitations						Monitoring Requirements		
	Quantity (lbs/day)		Other Units (Specify)						
Effluent Characteristic	**Avg. Monthly**	**Max. Daily**	**Avg. Monthly**	**Max.Daily**	**Instantaneous Maximum**		**Measurement Frequency**	**Sample Type**
Flow				*As Authorized		MGD	1/Quarter	Estimated
Biochemical Oxygen Demand (5-Day)	Report Only	Report Only	**Summer** 10.0 **Winter** 20.0	20.0 40.0	25.0 50.0	mg/l	1/Quarter	Grab
Total Suspended Solids	Report Only	Report Only	30.0	60.0	75.0	mg/l	1/Quarter	Grab
Nitrogen, Ammonia	Report Only	Report Only	**Summer** 8.0 **Winter** 15.0	16.0 30.0	20.0 37.5	mg/l	1/Quarter	Grab
Fecal Coliform			200	400	500	counts/ 100ml	1/Quarter	Grab
Dissolved Oxygen			Not less than 6.0 mg/l at any given time			mg/l	1/Quarter	Grab
Total Residual Chlorine(TRC)			Zero	Zero	Zero	µg/l	**1/Quarter	Grab

* As authorized on General Permit Registration

** Monitoring for TRC is required only if a chlorination or a chlorination/dechlorination system is used for bacteria disinfection. Permittee shall test on-site utilizing an EPA approved field test kit having an accuracy detection level down to 20 µg/l. Also see condition B.16.

Sewage facilities subject to Treatment Category IIA are required to provide secondary treatment technology followed by additional treatment such as an alternating surface sand filter or a rapid sand filter or a polishing pond or equivalent tertiary technology. Also acceptable is a Recirculating Sand Filter (RSF), preceded by primary or secondary treatment technology provided the RSF is designed for type of pretreated waste received. Bacteria disinfection shall be accomplished through the use of a chlorine or an ultraviolet disinfection system; however, should chlorine disinfection be utilized, a dechlorination system shall be provided. If necessary, post aeration of the final effluent shall be required, should a polishing pond not be provided.

The pH shall not be less than 6.0 **standard units and not more than** 9.0 **standard units and shall be monitored by grab sampling quarterly.**

Samples taken in compliance with the monitoring requirements specified above shall be taken at the following location(s): Effluent BOD_5 sampling shall be collected at a location immediately preceding disinfection. All other effluent samples shall be collected at or as near as possible to the point of discharge.

This discharge shall not cause violation of Title 47, Series 2, Section 3, of the West Virginia Legislative Rules issued pursuant to Chapter 22B, Article 3.

A.3 Discharge Limitations and Monitoring Requirements - *Treatment Category III*

During the period beginning on the effective date of this permit and lasting through the expiration date of this permit, permittees who have been assigned to Treatment Category III are authorized to discharge from the point source. The discharge shall comply with the following: (Summer Limitations are applicable May 1 - October 31 and Winter Limitations are applicable November 1 - April 30)

	Discharge Limitations						Monitoring Requirements	
	Quantity (lbs/day)		Other Units (Specify)					
Effluent Characteristic	**Avg. Monthly**	**Max. Daily**	**Avg. Monthly**	**Max.Daily**	**Instantaneous Maximum**		**Measurement Frequency**	**Sample Type**
Flow				*As Authorized		MGD	1/Quarter	Estimated
Biochemical Oxygen Demand (5-Day)	Report Only	Report Only	Summer 5.0 Winter 10.0	10.0 20.0	12.5 25.0	mg/l	1/Quarter	Grab
Total Suspended Solids	Report Only	Report Only	30.0	60.0	75.0	mg/l	1/Quarter	Grab
Nitrogen, Ammonia	Report Only	Report Only	Summer 3.0 Winter 6.0	6.0 12.0	7.5 15.0	mg/l	1/Quarter	Grab
Fecal Coliform			200	400	500	counts/ 100ml	1/Quarter	Grab
Dissolved Oxygen			Not less than 6.0 mg/l at any given time			mg/l	1/Quarter	Grab
Total Residual Chlorine (TRC)			28.0	57.0	70.0	µg/l	**1/Quarter	Grab

* As authorized on General Permit Registration

** Monitoring for TRC is required only if a chlorination or a chlorination/dechlorination system is used for bacteria disinfection. Permittee shall test on-site utilizing an EPA approved field test kit having an accuracy detection level down to 20 µg/l. Also see condition B.16.

Sewage facilities subject to Treatment Category III are required to provide secondary treatment technology followed by additional treatment such as an alternating surface sand filter or a rapid sand filter or a polishing pond or equivalent tertiary technology. Also acceptable is a Recirculating Sand Filter (RSF), preceded by primary or secondary treatment technology provided the RSF is designed for type of pretreated waste received. Bacteria disinfection shall be accomplished through the use of a chlorine or an ultraviolet disinfection system; however, should chlorine disinfection be utilized, a dechlorination system shall be provided. If necessary, post aeration of the final effluent shall be required, should a polishing pond not be provided.

The pH shall not be less than 6.0 **standard units and not more than** 9.0 **standard units and shall be monitored by grab sampling quarterly.**

Samples taken in compliance with the monitoring requirements specified above shall be taken at the following location(s): Effluent BOD_5 sampling shall be collected at a location immediately preceding disinfection. All other effluent samples shall be collected at or as near as possible to the point of discharge.

This discharge shall not cause violation of Title 47, Series 2, Section 3, of the West Virginia Legislative Rules issued pursuant to Chapter 22B, Article 3.

A.3A Discharge Limitations and Monitoring Requirements - *Treatment Category IIIA*

During the period beginning on the effective date of this permit and lasting through the expiration date of this permit, permittees who have been assigned to Treatment Category IIIA are authorized to discharge from the point source. The discharge shall comply with the following: (Summer Limitations are applicable May 1 - October 31 and Winter Limitations are applicable November 1 - April 30)

	Discharge Limitations						Monitoring Requirements	
	Quantity (lbs/day)		Other Units (Specify)					
Effluent Characteristic	**Avg. Monthly**	**Max. Daily**	**Avg. Monthly**	**Max.Daily**	**Instantaneous Maximum**		**Measurement Frequency**	**Sample Type**
Flow				*As Authorized		MGD	1/Quarter	Estimated
Biochemical Oxygen Demand (5-Day)	Report Only	Report Only	Summer 5.0 Winter 10.0	10.0 20.0	12.5 25.0	mg/l	1/Quarter	Grab
Total Suspended Solids	Report Only	Report Only	30.0	60.0	75.0	mg/l	1/Quarter	Grab
Nitrogen, Ammonia	Report Only	Report Only	Summer 3.0 Winter 6.0	6.0 12.0	7.5 15.0	mg/l	1/Quarter	Grab
Fecal Coliform			200	400	500	counts/ 100ml	1/Quarter	Grab
Dissolved Oxygen			Not less than 6.0 mg/l at any given time			mg/l	1/Quarter	Grab
Total Residual Chlorine(TRC)			Zero	Zero	Zero	µg/l	**1/Quarter	Grab

* As authorized on General Permit Registration

** Monitoring for TRC is required only if a chlorination or a chlorination/dechlorination system is used for bacteria disinfection. Permittee shall test on-site utilizing an EPA approved field test kit having an accuracy detection level down to 20 µg/l. Also see condition B.16.

Sewage facilities subject to Treatment Category IIIA are required to provide secondary treatment technology followed by additional treatment such as an alternating surface sand filter or a rapid sand filter or a polishing pond or an equivalent tertiary technology. Also acceptable is a Recirculating Sand Filter (RSF), preceded by primary or secondary treatment technology provided the RSF is designed for type of pretreated waste received. Bacteria disinfection shall be accomplished through the use of a chlorine or an ultraviolet disinfection system; however, should chlorine disinfection be utilized, a dechlorination system shall be provided. If necessary, post aeration of the final effluent shall be required, should a polishing pond not be provided.

The pH shall not be less than 6.0 **standard units and not more than** 9.0 **standard units and shall be monitored by grab sampling quarterly.**

Samples taken in compliance with the monitoring requirements specified above shall be taken at the following location(s): Effluent BOD_5 sampling shall be collected at a location immediately preceding disinfection. All other effluent samples shall be collected at or as near as possible to the point of discharge.

This discharge shall not cause violation of Title 47, Series 2, Section 3, of the West Virginia Legislative Rules issued pursuant to Chapter 22B, Article 3.

B. OTHER REQUIREMENTS:

1. Permittee shall submit electronically, each calendar quarter according to the enclosed format, a Discharge Monitoring Report (DMR) indicating in terms of concentration, and/or quantities, the values of the constituents analytically determined to be in the treatment facility effluent.

2. At least one (1) representative sample of the facility effluent shall be collected and analyzed for the regulated pollutant parameters and shall be recorded on the appropriate Discharge Monitoring Report (DMR) form, in each of the following monitoring periods. The required DMRs shall be submitted electronically to the Division of Water & Waste Management by each respective due date:

Monitoring Period	DMR Due Date
January 1 - March 31	**April 20**
April 1 - June 30	**July 20**
July 1 - September 30	**October 20**
October 1 - December 31	**January 20**

3. All required monitoring and reporting shall be submitted electronically to the Division of Water & Waste Management within 20 days of the end of the reporting period. Additional information pertaining to effluent monitoring and reporting can be found in Section III of Appendix A of this permit.

4. The permittee shall connect to a municipal or public service district sewage collection system when one becomes available. However, prior to this connection, permittee shall obtain written permission from the municipal or public service district sewage system authority which will receive the waste and submit a request along with one (1) copy of the written permission to this agency for approval. Upon closure of a facility, or upon connection to a municipal or public service district sewage collection system, proper abandonment procedures as per West Virginia Division of Health and Human Resources Legislative Rule 64-9-3.6 shall be followed within 90 days of connection or closure.

5. The entire sewage treatment facility shall be adequately protected by fencing as per West Virginia Division of Health and Human Resources Legislative Rule 64 CSR 47.

6. This permit is issued contingent upon the operator of this plant possessing and maintaining a Class S certificate for Wastewater Treatment Plant Operators, issued by the State of West Virginia.

7. The herein-described treatment works, structures, electrical and mechanical equipment shall be protected from physical damage by the maximum expected one hundred (100) year flood level and operability be maintained during the twenty-five (25) year flood level.

8. This permit authorizes the treatment of domestic sewage from households and commercial establishments. The treatment of any industrial or high strength sewage wastes may be approved, on a case-by-case basis, after evaluation of all wastewater flows, pollution concentrations, and the total treatment capacity of the Wastewater Treatment System.

9. Permittees and/or plant operators may be required, at the discretion of the Division of Water & Waste Management, to attend training courses sponsored by the Environmental Training Center at Cedar Lakes, WV if permittees and/or plant operators fail to properly operate and maintain their sewage disposal system as required in this Permit.

10. Permittees adding sewage collection system extensions or hook-ups beyond what is described in the original registration application, or an approved modification of the registration, will be subject to civil and/or criminal penalties.

11. This permit will be considered as an individual permit if the coverage of a specific individual facility is the subject of an appeal in accordance with Chapter 22, Article 11, Section 21 of the West Virginia Code. Any subsequent action taken as result of the appeal will only affect the specific subject facility.

12. Proposed wastewater treatment facilities must meet the requirements as described in their Permit to Construct issued by the Bureau for Public Health as a term of compliance with this General Permit. Facilities unable to achieve permit limitations may be required to upgrade the treatment system.

13. The Director may require any person authorized by this permit to apply for and obtain an individual NPDES permit. Any interested person may petition the Director to take action under this paragraph. The Director may require any owner or operator authorized to discharge under this permit to apply for an individual NPDES permit only if the owner or operator has been notified in writing that an individual permit application is required. This notice shall include a brief statement of the reasons for this decision, an application form, a statement setting a deadline for the owner or operator to file the application and a statement as to when the coverage under this general permit shall terminate.

14. Facilities Discharging to 303(d) Streams
Permittees discharging pollutants of concern to waters for which there is a total maximum daily load (TMDL) established or approved by EPA are not eligible for coverage under this general permit, unless the permit conditions of this general permit are consistent with the assumptions and requirements of such TMDL. Therefore, the permittee must submit an NPDES application to the West Virginia Department of Environmental Protection for coverage under an individual NPDES permit. The permittee should consult with the State or EPA TMDL authority to confirm if his/her facility is subject to an approved TMDL.

15. Endangered and Threatened Species
If a site discharges to a stream where a federally endangered or threatened species or their habitats are present, the applicant should contact the US Fish & Wildlife Service to insure that requirements of the Federal Endangered Species Act are met.

16. Available sampling methods for total residual chlorine (TRC) are currently not sensitive enough to confirm compliance with the permit limitations imposed. TRC samples shall be taken, preserved and analyzed in accordance with the latest edition of 40 CFR Part 136. The permittee shall use an EPA Approved Method with at least a method detection level (MDL) of 20 ug/l (0.02 mg/l). Any TRC sampling result reported as less than the MDL stated above shall be assumed to confirm compliance for purposes of permit compliance. Should a more sensitive EPA approved method become available for field analysis of TRC, the permittee shall perform TRC self-monitoring in accordance with the new method. If the new method is not sensitive enough to determine compliance with specified TRC limits, analytical results reported as "not detected" at the MDL of the new method will be deemed compliant for purposes of permit compliance.

17. A plan to use clustered home aeration units serving individual residences, whether or not they are then connected to a common sewer line, will not receive approval.

18. Facilities proposing a new or expanded discharge (above current permitted flow) within the Chesapeake Bay drainage area must obtain an individual NPDES permit. This applies to discharges located in the following counties:

    Berkeley; Grant; Hampshire; Hardy; Jefferson; Mineral; Morgan and Pendleton. Also, part of eastern Preston and a small section of Tucker (north of Thomas) are included.

19. All treatment systems must provide for disinfection of the effluent. Facilities registered under this general permit that utilize chlorination for disinfection must also provide for de-chlorination of the effluent prior to final discharge. Discharges to Trout Streams will be subject to limitation of Zero Total Residual Chlorine. **Therefore, the use of ultraviolet disinfection is recommended for a facility that discharges to a trout stream.**

20. Only chlorine tablets approved for use in disinfection of wastewater shall be utilized. Permittees are strictly prohibited from using chlorine tablets designed for use in swimming pools or any other designated use.

21. It is recognized that this general permit continues to be in a developmental stage and its limitations, standards and conditions will be reviewed by the Director at the time of reissuance, or earlier if necessary, for possible revisions. Based upon that review, such revisions may be more or less stringent than the limitations, standards and conditions contained in this general permit.

22. All wiring and electrical connections must conform to manufacturer's recommendations as well as applicable federal, state and local codes.

23. The DEP reserves the right to impose more stringent discharge limitations or additional restrictions, if necessary, to maintain the water quality integrity and the designated uses of the receiving water bodies.

24. This permit does not in any way authorize the permittee to discharge a pollutant not listed or quantified in the application, or limited or monitored for in the permit.

25. Authorization to discharge pursuant to the conditions of this permit does not relieve the permittee of any liability for damages to state waters or private property.

26. Treatment system utilizing steel tanks shall be required to provide Cathodic Protection and institute a proper Operation & Maintenance (O&M) program, including compliance testing every three (3) years performed by a WV Certified Class D or E Tester.

27. This permit shall be promptly modified or revoked and reissued to conform to any effluent standard or limitation issued if an applicable standard or limitation is promulgated under Section 301(b)(2)(C) and (D), 304(b)(2) and/or 307(a)(2) of the Clean Water Act, and that effluent standard or limitation:

    1. Contains different conditions or is otherwise more stringent than any effluent limitation in this permit, or
    2. Controls any pollutant not limited in the permit; or
    3. Requires reassessment due to change in 303(d) status of water body; or
    4. Incorporates the results of any TMDL allocation, which may be approved for the receiving water body.

C. SEWAGE SLUDGE MANAGEMENT REQUIREMENTS

1. All sewage treatment facilities authorized coverage under this permit shall have sewage sludge removed from their system only by a septage hauler that is certified and registered under one of the two septage hauler general permits issued by this Division, unless disposal of the sewage sludge is outside of the state of WV.

2. Should permittees choose to use any sewage sludge disposal method other than the method listed in item 1 above, they must obtain prior approval of that method by the Director of this Division.

3. Upon authorization of coverage under this permit, the permittee shall have fulfilled the requirements of Section II.5 of Appendix A of this Permit with respect to the sludge generated by the wastewater treatment facilities permitted herein and compliance with the terms and conditions of the approved Sewage Sludge Management Practices shall become incorporated herewith.

4. The permittee shall monitor and report yearly on the enclosed Sludge Management Report form. See B.3 for submission requirements.

5. The permittee shall submit the Sewage Sludge Management Report form for each monitoring period listed below according to the following due dates:

Monitoring Period	Sewage Sludge Management Report Due Date
January 1 - December 31	January 20

6. The permittee shall maintain all records and reports of all monitoring required by Section C of this permit for five (5) years after the date of monitoring or reporting. Records should include copies of all required reports; and records of all data used to complete these reports.

The herein described activity is to be extended, modified, added to, enlarged, acquired, constructed or installed, and operated, used and maintained strictly in accordance with the terms and conditions of this permit; with all plans and specifications previously submitted with Facility Registration Application Form or individual permit application; with a plan of maintenance and method of operation thereof; and with any applicable rules and regulations promulgated by the Director of the Department of Environmental Protection.

Failure to comply with the terms and conditions of this permit, with the plans and specifications previously submitted with Facility Registration Application Form or individual permit application, and with a plan of maintenance and method of operation thereof shall constitute grounds for the revocation or suspension of this permit and for the invocation of all the enforcement procedures set forth in Chapter 22, Article 11 of the Code of West Virginia.

This permit is issued in accordance with the provisions of Chapter 22, Article 11 of the Code of West Virginia.

BY: Scott G. Mandirola

Scott G. Mandirola
Director

Appendix A

I. MANAGEMENT CONDITIONS

1. Duty to Comply

(a) The permittee must comply with all conditions of this permit. Permit noncompliance constitutes a violation of the CWA and State Act and is grounds for enforcement action; such as suspension or revocation of permit followed by possible civil or criminal action.

(b) The permittee shall comply with all effluent standards or prohibitions established under Section 307(a) of the CWA for toxic pollutants within the time provided in the regulations that establish these standards or prohibitions, even if the permit has not yet been modified to incorporate the requirement.

(c) Systems unable to achieve compliance may be required to replace or add additional treatment components.

2. Duty to Reapply

If the permittee wishes to continue an activity regulated by this permit after the expiration date of this permit, the permittee must apply for a new permit within thirty (30) days of receipt of the reissuance package. Since the permittee is registered for coverage under a general permit, this agency will notify the permittee regarding permit reissuance at the appropriate time.

3. Duty to Mitigate

The permittee shall take all reasonable steps to minimize or prevent any discharge in violation of this permit, which has a reasonable likelihood of adversely affecting human health or the environment.

4. Permit Actions

This permit may be modified, revoked and reissued, suspended, or revoked for cause. The filing of a request by the permittee for permit modification, revocation and reissuance, or revocation, or a notification of planned changes or anticipated noncompliance, does not stay any permit conditions.

5. Property Rights

This permit does not convey any property rights of any sort or any exclusive privilege.

6. Signatory Requirements

All registration application forms, reports, or information submitted to the Director shall be signed and certified as required in Title 47, Series 10, Section 4.6 of the West Virginia Legislative Rules.

7. Transfers

This permit coverage is not transferable to any person except after notice to, and approval by, the Director. The Director may require modification or revocation and reissuance of the permit to change the name of the permittee and incorporate such other requirements as may be necessary.

8. Duty to Provide Information

The permittee shall furnish to the Director, within a reasonable specified time, any information which the Director may request to determine whether cause exists for modifying, revoking and reissuing, suspending, or revoking this permit, or to determine compliance with this permit. The permittees shall also furnish to the Director, upon request, copies of records required to be kept by this permit.

9. Other Information

Where the permittee becomes aware that he/she has failed to submit any relevant facts in a facility registration application form, or submitted incorrect information in a facility registration application form or in any report to the Director, he/she shall promptly submit such facts or information.

10. Inspection and Entry

The permittee shall allow the Director, or an authorized representative, upon the presentation of credentials and other documents as may be required by law, to:

a) Enter upon the permittee's premises in which an effluent source or activity is located, or where records must be kept under the conditions of this permit;
b) Have access to and copy at reasonable times, any records that must be kept under the conditions of this permit;
c) Inspect at reasonable times any facilities, equipment (including monitoring and control equipment), practices, or operations regulated or required under this permit; and
d) Sample or monitor at reasonable times, for the purposes of assuring permit compliance or as otherwise authorized by the State Act, any substances or parameters at any locations.

I. MANAGEMENT CONDITIONS (Continued)

11. Permit Modification

This permit may be modified, suspended, or revoked in whole or in part during its term in accordance with the provisions of Chapter 22, Article 11, Section 12 of the Code of West Virginia.

12. Water Quality

The effluent or effluents covered by this permit are to be of such quality so as not to cause violation of applicable water quality standards adopted by the Department of Environmental Protection.

13. Outlet Markers

A permanent marker at the establishment shall be posted in accordance with Title 47, Series 11, Section 9 of the West Virginia Legislative Rules promulgated pursuant to Chapter 22, Article 11.

14. Liabilities

a) Any person who violates a permit condition implementing sections 301, 302, 306, 307, 308, 318, or 405 of the Clean Water Act is subject to a civil penalty not to exceed $25,000 per day of such violation. Any person who willfully or negligently violates permit conditions implementing sections 301, 302, 306, 307, or 308 of the Clean Water Act is subject to a penalty not less than $2,500 nor more than $25,000 per day of violation, or by imprisonment for not more than one year, or by both fine and imprisonment.

b) Any person who falsifies, tampers with, or knowingly renders inaccurate any monitoring device or method required to be maintained under this permit shall, upon conviction, be punished by a fine of not more than $10,000 per violation, or by imprisonment for not more than 6 months per violation, or by both fine and imprisonment.

c) Any person who knowingly makes any false statement, representation, or certification in any record or other document submitted or required to be maintained under this permit, including monitoring reports or reports of compliance or noncompliance shall, upon conviction, be punished by a fine of not more than $10,000 per violation, or by imprisonment for not more than 6 months per violation, or by both fine and imprisonment.

d) Nothing in I.14.a), b) and c) shall be construed to limit or prohibit any other authority the Director may have under the State Water Pollution Control Act, Chapter 22, Article 11.

15. Outlet Accessibility

The outlet shall be located in an area that is easily accessible for compliance inspection and monitoring:

a. It shall be free of debris and tall weeds;
b. It shall not be submerged under water;
c. It shall not be discharged into the ground (sub-surface);
d. It shall have proper ground clearance to allow for compliance monitoring;
e. It shall not be combined with any other outlet pipes or any form of drainage pipe; and
f. If it is drained into a culvert or storm drain it must be easily accessible for monitoring.

If site-specific conditions do not allow for the installation of an easily accessible outlet, then a sampling port may be installed instead. Sampling ports must be designed, constructed, and installed to provide easy access for collecting a "free fall" water sample from the effluent stream after chlorination and de-chlorination.

16. Continuation of this general permit

If this general permit is not reissued or replaced prior to the expiration date, it will be administratively continued in accordance with 47 CSR 10 and remain in force and effect. If you were authorized to discharge under this general permit prior to the expiration date, any discharges authorized under this permit will automatically remain covered by this general permit until the earliest of:

A) Your authorization for coverage under a reissued general permit or a replacement of this general permit following your timely and appropriate submittal of a complete application requesting authorization to discharge under the new general permit and compliance with the requirements of the new permit; or B) Your submittal of notification that the facility has ceased operations; or C) Issuance or denial of an individual permit for the facility's discharge; or D) A formal permit decision by DWWM not to reissue this general permit, at which time DWWM will identify a reasonable time period of covered dischargers to seek coverage under an alternative general permit or individual permit. Coverage under this permit will cease at the end of this time period.

II. OPERATION AND MAINTENANCE

1. Proper Operation and Maintenance

The permittee shall at all times properly operate and maintain all facilities and systems of treatment and control (and related appurtenances) which are installed or used by the permittee to achieve compliance with the conditions of the permit. Proper operation and maintenance also includes adequate laboratory controls, and appropriate quality assurance procedures, and also a log of all maintenance performed on the system (aerators, blowers, timers, etc). Unless otherwise required by Federal or State law, this provision requires the operation of back-up auxiliary facilities or similar systems that are installed by the permittee only when their operation is necessary to achieve compliance with the conditions of the permit. For domestic waste treatment facilities, waste treatment operators (Class S) as classified by the WV Bureau for Public Health Regulations authorized under Chapter 16, Article 1, Public Health Laws, Code of West Virginia, will be required. Systems unable to achieve permit limits may be required to upgrade.

2. Need to Halt or Reduce Activity Not a Defense

It shall not be a defense for a permittee in an enforcement action that it would have been necessary to halt or reduce the permitted activity in order to maintain compliance with the conditions of this permit.

3. Bypass

a) Definitions

(1) "Bypass" means the intentional diversion of waste streams from any portion of a treatment facility: and

(2) "Severe property damage" means substantial physical damage to property, damage to the treatment facilities that causes them to become inoperable, or substantial and permanent loss of natural resources that can reasonably be expected to occur in the absence of a bypass. Severe property damage does not mean economic loss caused by delays in production.

b) Bypass not exceeding limitations. The permittee may allow any bypass to occur which does not cause effluent limitations to be exceeded, but only if it also is for essential maintenance to assure efficient operation. These bypasses are not subject to the provisions of II.3.c) and II.3.d) of this permit.

c) (1) If the permittee knows in advance of the need for a bypass, it shall submit prior notice, if possible at least ten (10) days before the date of the bypass;

(2) If the permittee does not know in advance of the need for bypass, notice shall be submitted as required in IV.2.b) of this permit.

d) Prohibition of bypass

(1) Bypass is permitted only under the following conditions, and the Director may take enforcement action against a permittee for bypass, unless;

(A) Bypass was unavoidable to prevent loss of life, personal injury, or severe property damage;

(B) There were no feasible alternatives to the bypass, such as the use of auxiliary treatment facilities, retention of untreated wastes, or maintenance during normal periods of equipment downtime. This condition is not satisfied if adequate backup equipment should have been installed in the exercise of reasonable engineering judgment to prevent a bypass which occurred during normal periods of equipment downtime or preventative maintenance; and

(C) The permittee submitted notices as required under II.3.c) of this permit.

(2) The Director may approve an anticipated bypass, after considering its adverse effects, if the Director determines that it will meet the three conditions listed in II.3.d)(1) of this permit.

4. Upset

a) Definition. "Upset" means an exceptional incident in which there is unintentional and temporary noncompliance with technology-based permit effluent limitations because of factors beyond the reasonable control of the permittee. An upset does not include noncompliance to the extent caused by operational error, improperly designed treatment facilities, inadequate treatment facilities, lack of preventative maintenance, or careless or improper operation.

b) Effect of upset. An upset constitutes an affirmative defense to an action brought for noncompliance with such technology-based permit effluent limitations if the requirements of II 4.c are met. No determination made during administrative review of claims that noncompliance was caused by upset, and before an action for noncompliance, is final administrative action subject to judicial review.

c) Conditions necessary for a demonstration of upset. A permittee who wishes to establish the affirmative defense of upset shall demonstrate, through properly signed, contemporaneous operating logs or other relevant evidence that:

(1) An upset occurred and that the permittee can identify the cause(s) of the upset;

(2) The permitted facility was at the time being properly operated.

(3) The permittee submitted notice of the upset as required in IV.2.b) of this permit.

(4) The permittee complied with any remedial measures required under I.3 of this permit.

d) Burden of proof. In any enforcement preceding, the permittee seeking to establish the occurrence of an upset has the burden of proof.

4. Installation of Appropriate Treatment Not a Defense

It shall not be a defense for a permittee in noncompliance with applicable effluent limitations to claim that the appropriate minimum treatment was installed as required in Section A of this permit. Sewage treatment systems shall incorporate design criteria that will achieve assigned effluent limits during all normal seasonal or climatic conditions of the year.

II. OPERATION AND MAINTENANCE (Continued)

5. Removed Substances

Where removed substances are not otherwise covered by the terms and conditions of this permit or other existing permit by the Director, any solids, sludge, filter backwash or other pollutants (removed in the course of treatment or control of wastewaters) and which are intended for disposal within the State, shall be disposed of only in a manner and a site subject to the approval by the Director. If such substances are intended for disposal outside the State or for reuse, i.e., as a material used for making another product, which in turn has another use, the permittee shall notify the Director in writing of the proposed disposal or use of such substances, the identity of the prospective disposer or users, and the intended place of disposal or use, as appropriate.

III. MONITORING AND REPORTING:

1. **Representative Sampling, Sample Type and Sampling Period**

   Samples and measurements taken for the purpose of monitoring shall be representative of the monitored activity and during normal operation. "Grab" samples are required for all regulated pollutant parameters.

2. **Reporting**

   a) Permittee shall submit electronically as required, according to the enclosed format, a Discharge Monitoring Report (DMR) indicating in terms of concentration, the values of the constituents listed in Section A analytically determined to be in the effluent(s). DMR submissions shall be made in accordance with the terms contained in Section B of this permit.
   b) Enter reported average and maximum values under "Quantity" and "Concentration" in the units specified for each parameter, as appropriate.
   c) Specify the number of analyzed samples that exceed the allowable permit conditions in the columns labeled "N.E." (i.e., number exceeding).
   d) Specify frequency of analysis for each parameter as number of analyses/specified period (e.g., 3/month is equivalent to 3 analyses performed every calendar month). If continuous, enter "Cont.". The frequency listed on format is the minimum required.

3. **Test Procedures**

   a. Samples shall be taken, preserved and analyzed in accordance with the latest edition of 40 CFR Part 136, unless other test procedures have been specified elsewhere in this permit. Total residual chlorine is to be tested on-site.
   b. All analyses performed on solids shall be analyzed in accordance with analytical methods listed in U.S. Environmental Protection Agency analytical procedure SW-846, Test Methods for Evaluating Solid Waste, Physical/Chemical Methods.
   c. Any commercial laboratory used for analyzing samples required by this permit must be certified in accordance with Chapter 22, Article 1, Section 15.

4. **Recording of Results**

   For each measurement or sample taken pursuant to the permit, the permittee shall record the following information.

   a) The date, exact place, and time of sampling or measurement;
   b) The date(s) analyses were performed;
   c) The individual(s) who performed the sampling or measurement;
   d) The individual(s) who performed the analyses; if a commercial laboratory is used, the name and address of the laboratory;
   e) The analytical techniques or methods used, and
   f) The results of such analyses. Information not required by the DMR form is not to be submitted to this agency, but is to be retained as required in III.6.

5. **Additional Monitoring by Permittee**

   If the permittee monitors any pollutant at any monitoring point specified in this permit more frequently than required by this permit, using approved test procedures or others as specified in this permit, the results of this monitoring shall be included in the calculation and reporting of the data submitted in the Discharge Monitoring Report Form. Such increased frequency shall also be indicated. Calculations for all limitations, which require averaging of measurements, shall utilize an arithmetic mean unless otherwise specified in the permit.

6. **Records Retention**

   The permittee shall retain records of all monitoring information, including all calibration and maintenance records and all original chart recordings for continuous monitoring instrumentation, copies of all reports required by this permit, and records of all data used to complete the application for the permit, for a period of at least five (5) years from the date of the sample, measurement, report or application. This period may be extended by request of the Director at any time.

7. **Definitions**

   a) "Daily discharge" means the discharge of a pollutant measured during a calendar day or within any specified period that reasonably represents the calendar day for purposes of sampling. For pollutants with limitations expressed in units of mass, the daily discharge is calculated as the total mass of the pollutant discharged over the day. For pollutants with limitations expressed in other units of measurement, the daily discharge is calculated as the average measurement of the pollutant over the day.
   b) "Average monthly discharge limitation" means the highest allowable average of daily discharges over a calendar month, calculated as the sum of all daily discharges measured during a calendar month divided by the number of daily discharges measured during that month.
   c) "Maximum daily discharge limitation" means the highest allowable daily discharge.
   d) "Instantaneous maximum limitation" means the highest allowable concentration of pollutant in the discharge at any given time. Determination of this concentration may be based on a grab sample analysis.
   e) "Average monthly fecal coliform bacteria" means the geometric average of all samples collected during the month.
   f) "Composite Sample" is a combination of individual samples obtained at regular intervals over a time period. Either the volume of each individual sample is proportional to discharge flow rates or the sampling interval (for constant volume samples) is proportional to the flow rates over the time period used to produce the composite. The maximum time period between individual samples shall be two hours.
   g) "Grab Sample" is an individual sample collected in less than 15 minutes.
   h) "is" = immersion stabilization - a calibrated device is immersed in the effluent stream until the reading is stabilized.

III. MONITORING AND REPORTING (Continued):

i) "Measured Flow" means any method of liquid volume measurement, the accuracy of which has been previously demonstrated in engineering practice, or which a relationship to absolute volume has been obtained.
j) "Estimate" means to be based on a technical evaluation of the sources contributing to the discharge including, but not limited to pump capabilities, water meters and batch discharge volumes.
k) "Best Management Practices" (BMPs) means schedules of activities, prohibitions of practices, maintenance procedures, and other management practices to prevent or reduce the pollution of waters of the State. BMPs also include treatment requirements, operating procedures and practices to control plant site runoff, spillage or leaks, sludge or waste disposal, or drainage from raw material storage.
l) "CWA" means the Clean Water Act.
m) "Secretary" means the Secretary of the Department of Environmental Protection or person to whom the Secretary has delegated authority or duties pursuant to W. Va. Code §22-1-6.
n) "Director" means the Director of the Office of Water Resources, Division of Environmental Protection or their designated representative.
o) "Facility Registration Application Form" means the form(s) designated by the Director for the purpose of making application for coverage under a general permit.
p) "Trout Streams" means any waters, which meet the definition of Section 2.19 of 46 CSR1.

IV. OTHER REPORTING

1. Reporting Spills and Accidental Discharges

Nothing in this permit shall be construed to preclude the institution of any legal action or relieve the permittee for any responsibilities, liabilities, or penalties established pursuant to Title 47, Series 11, Section 2 of the West Virginia Legislative Rules promulgated pursuant to Chapter 22, Article 11.

Attached is a copy of the West Virginia Spill Alert System for use in complying with Title 47, Series 11, Section 2 of the rules as they pertain to the reporting of spills and accidental discharges.

2. Immediate Reporting

a) The permittee shall report any non-compliance that may endanger health or the environment immediately after becoming aware of the circumstances by using the Agency's designated spill alert telephone number. A written submission shall be provided within five (5) days of the time the permittee becomes aware of the circumstances. The written submission shall contain a description of the noncompliance and its cause; the period of noncompliance, including exact dates and times, and if the noncompliance has not been corrected, the anticipated time it is expected to continue; and steps taken or planned to reduce, eliminate, and prevent recurrence of the noncompliance.
b) The following shall also be reported immediately:
   (1) Any unanticipated bypass that exceeds any effluent limitation in the permit;
   (2) Any upset which exceeds any effluent limitation in the permit; and
   (3) Violation of a maximum daily discharge limitation for any of the pollutants listed by the Director in the permit to be reported immediately. This list shall include any toxic pollutant or hazardous substance, or any pollutant specifically identified as the method to control a toxic pollutant or hazardous substance.
c) The Director may waive the written report on a case-by-case basis if the oral report has been received in accordance with the above.
d) Compliance with the requirements of IV.2.a or IV.2.b of this section, shall not relieve a person of compliance with Title 47, Series 11, Section 2 of the West Virginia Legislative Rules.

3. Reporting Requirements

a) Planned changes. The permittee shall give notice to the Director of any planned physical alterations or additions to the permitted facility that may affect the nature or quantity of the discharge. Notice is required when:

   (1) The alteration or addition to a permitted facility may meet one of the criteria for determining whether a facility is a new source in Section 13.7.b of Title 47, Series 10 of the West Virginia Legislative Rules; or
   (2) The alteration or addition could significantly change the nature or increase the quantity of pollutants discharged. The notification applies to pollutants that are subject neither to effluent limitations in the permit, nor to notification requirements under IV.2.of this section.
b) Anticipated noncompliance. The permittee shall give advance notice to the Director of any planned changes in the permitted facility or activity that may result in noncompliance with permit requirements.

4. Other Noncompliance

The permittee shall report all instances of noncompliance not reported under the above paragraphs at the time monitoring reports are submitted. The reports shall contain the information listed in IV.2.a).

EMERGENCY RESPONSE SPILL ALERT SYSTEM
WEST VIRGINIA DEPARTMENT OF ENVIRONMENTAL PROTECTION

REQUIREMENTS:

Title 47, Series 11, Section 2 of the West Virginia Legislative Rules, Environmental Protection, Water Resources - Waste Management, Effective July 1, 1987.

RESPONSIBILITY FOR REPORTING:

Each and every person who may cause or be responsible for any spill or accidental discharge of pollutants into the waters of the State shall give immediate notification to the Division of Water and Waste Management's Emergency Notification Number, 1-800-642-3074. Such notification shall set forth insofar as possible and as soon thereafter as practical the time and place of such spill or discharge, type or types and quantity or quantities of the material or materials therein, action or actions taken to stop such spill or discharge and to minimize the polluting effect thereof, the measure or measures taken or to be taken in order to prevent a recurrence of any such spill or discharge and such additional information as may be requested by the Division of Water and Waste Management. This also applies to spills to the waters of the State resulting from accidents to common carriers by highway, rail and water.

It shall be the responsibility of each industrial establishment or other entity discharging directly to a stream to have available the following information pertaining to those substances that are employed or handled in its operation in sufficiently large amounts as to constitute a hazard in case of an accidental spill or discharge into a public stream:

(1) Potential toxicity in water to man, animals and aquatic life;
(2) Details on analytical procedures for the quantitative estimation of such substances in water and
(3) Suggestions on safeguards or other precautionary measures to nullify the toxic effects of a substance once it has gotten into a stream.

Failure to furnish such information as required by Section 14, Article 11, Chapter 22, Code of West Virginia may be punishable under Section 24, Article 11, Chapter 22, and/or Section 22, Article 11, Chapter 22, Code of West Virginia.

It shall be the responsibility of any person who causes or contributes in any way to the spill or accidental discharge of any pollutant or pollutants into State waters to immediately take any and all measures necessary to contain such spill or discharge. It shall further be the responsibility of such person to take any and all measures necessary to clean-up, remove and otherwise render such spill or discharge harmless to the waters of the State.

When the Director determines it necessary for the effective containment and abatement of spills and accidental discharges, the Director may require the person or persons responsible for such spill or discharge to monitor affected waters in a manner prescribed by the Director until the possibility of any adverse effect on the waters of the State no longer exists.

VOLUNTARY REPORTING BY LAW OFFICERS, U. S. COAST GUARD, LOCK MASTERS AND OTHERS:

In cases involving river and highway accidents where the responsible party may or may not be available to report the incident, law officers, U. S. Coast Guard, Lock Masters and other interested person(s) should make the report.

WHO TO CONTACT:
Notify the following number: **1-800-642-3074**

INFORMATION NEEDED:
- Source of spill or discharge
- Location of incident
- Time of incident
- Material spilled or discharged
- Amount spilled or discharged
- Toxicity of material spilled or discharged
- Personnel at the scene
- Actions initiated
- Shipper/Manufacturer identification
- Railcar/Truck identification number
- Container type

WRD 2A-82
LIMITATION CATEGORY: 3
GEN. PMT. REGISTRATION NO. WVG550533

STATE OF WEST VIRGINIA
NATIONAL POLLUTANT DISCHARGE ELIMINATION SYSTEM
DISCHARGE MONITORING REPORT

Final Limitations

FACILITY NAME: (Shenandoah Junction WWTP) SHENANDOAH JUNCTION PUBLIC
LOCATION OF FACILITY: SHENANDOAH JUNCTION; Jefferson County
PERMIT NO.: WV0103110 OUTLET NO.: 001
WASTELOAD FOR THE MONTH OF:

CERTIFIED LABORATORY NAME:
CERTIFIED LABORATORY ADDRESS:
INDIVIDUAL PERFORMING ANALYSIS:

Parameter		Quantity				Other Units						Measurement Frequency	Sample Type
				Units	N.E.				CEL*	Units	N.E.		
50050 (ML-1) RF-B Flow in Conduit or thru plant Year Round	Reported												
	Permit Limits	N/A	N/A			N/A	N/A	0.018 Max. Daily	N/A	mgd		1/quarter	Estimated
00310 (ML-B) RF-B BOD, 5-Day 20 Deg C Summer May 1-Oct 31	Reported												
	Permit Limits	Rpt Only Avg. Monthly	Rpt Only Max. Daily	Lbs/Day		5 Avg. Monthly	10 Max. Daily	12.5 Inst. Max	N/A	mg/l		1/quarter	Grab
00530 (ML-A) RF-B Total Suspended Solids Year Round	Reported												
	Permit Limits	Rpt Only Avg. Monthly	Rpt Only Max. Daily	Lbs/Day		30 Avg. Monthly	60 Max. Daily	75 Inst. Max	N/A	mg/l		1/quarter	Grab
74055 (ML-A) RF-B Coliform, Fecal Year Round	Reported												
	Permit Limits	N/A	N/A			200 Mon. Geo. Mean	400 Max. Daily	500 Inst. Max	N/A	Cols/100ml		1/quarter	Grab
00400 (ML-A) RF-B pH Year Round	Reported												
	Permit Limits	N/A	N/A			6 Inst. Min	N/A	9 Inst. Max	N/A	S.U.		1/quarter	Grab
00300 (ML-A) RF-B Dissolved Oxygen Year Round	Reported												
	Permit Limits	N/A	N/A			6 Inst. Min	N/A	N/A	N/A	mg/l		1/quarter	Grab
00610 (ML-A) RF-B Ammonia Nitrogen Summer May 1-Oct 31	Reported												
	Permit Limits	Rpt Only Avg. Monthly	Rpt Only Max. Daily	Lbs/Day		3 Avg. Monthly	6 Max. Daily	7.5 Inst. Max	N/A	mg/l		1/quarter	Grab
50060 (ML-1) RF-B Chlorine, Total Residual Year Round	Reported												
	Permit Limits	N/A	N/A			28 Avg. Monthly	57 Max. Daily	70 Inst. Max	N/A	ug/l		1/quarter	Grab

* CEL = Compliance Evaluation Level

Name of Principal Executive Officer	I certify under penalty of law that this document and all attachments were prepared under my direction or supervision in accordance with a system designed to assure that qualified personnel properly gather and evaluate the information submitted. Based on my inquiry of the person or persons who manage the system, or those persons directly responsible for gathering the information, the information submitted is, to the best of my knowledge and belief, true, accurate, and complete. I am aware that there are significant penalties for submitting false information including the possibility of a fine and imprisonment for knowing violations.	Date Completed
Title of Officer		Signature of Principal Executive Officer or Authorized Agent

WRD 2A-82
LIMITATION CATEGORY: 3
GEN. PMT. REGISTRATION NO. WVG550533

STATE OF WEST VIRGINIA
NATIONAL POLLUTANT DISCHARGE ELIMINATION SYSTEM
DISCHARGE MONITORING REPORT

Final Limitations

FACILITY NAME: (Shenandoah Junction WWTP) SHENANDOAH JUNCTION PUBLIC
LOCATION OF FACILITY: SHENANDOAH JUNCTION, Jefferson County
PERMIT NO.: WV0103110 OUTLET NO.: 001
WASTELOAD FOR THE MONTH OF:

CERTIFIED LABORATORY NAME:
CERTIFIED LABORATORY ADDRESS:
INDIVIDUAL PERFORMING ANALYSIS:

Parameter		Quantity		Units	N.E.	Other Units			CEL*	Units	N.E.	Measurement Frequency	Sample Type
50050 (ML-1) RF-B Flow,In Conduit or thru plant Year Round	Reported								N/A	mgd		1/quarter	Estimated
	Permit Limits	N/A	N/A			N/A	N/A	0.018 Max Daily					
00310 (ML-B) RF-B BOD, 5-Day 20 Deg C Winter Nov 1-Apr 30	Reported								N/A	mg/l		1/quarter	Grab
	Permit Limits	Rpt Only Avg Monthly	Rpt Only Max Daily	Lbs/Day		10 Avg Monthly	20 Max Daily	25 Inst Max					
00530 (ML-A) RF-B Total Suspended Solids Year Round	Reported								N/A	mg/l		1/quarter	Grab
	Permit Limits	Rpt Only Avg Monthly	Rpt Only Max Daily	Lbs/Day		30 Avg Monthly	60 Max Daily	75 Inst Max					
74055 (ML-A) RF-B Coliform, Fecal Year Round	Reported								N/A	Cnt/100ml		1/quarter	Grab
	Permit Limits	N/A	N/A			200 Mon Geo Mean	400 Max Daily	500 Inst Max					
00400 (ML-A) RF-B pH Year Round	Reported								N/A	S.U.		1/quarter	Grab
	Permit Limits	N/A	N/A			6 Inst Min	N/A	9 Inst Max					
00300 (ML-A) RF-B Dissolved Oxygen Year Round	Reported								N/A	mg/l		1/quarter	Grab
	Permit Limits	N/A	N/A			6 Inst Min	N/A	N/A					
00610 (ML-A) RF-B Ammonia Nitrogen Winter Nov 1-Apr 30	Reported								N/A	mg/l		1/quarter	Grab
	Permit Limits	Rpt Only Avg Monthly	Rpt Only Max Daily	Lbs/Day		5 Avg Monthly	12 Max Daily	15 Inst Max					
50060 (ML-1) RF-B Chlorine, Total Residual Year Round	Reported								N/A	ug/l		1/quarter	Grab
	Permit Limits	N/A	N/A			28 Avg Monthly	57 Max Daily	70 Inst Max					

* CEL = Compliance Evaluation Level

Name of Principal Executive Officer	I certify under penalty of law that this document and all attachments were prepared under my direction or supervision in accordance with a system designed to assure that qualified personnel properly gather and evaluate the information submitted. Based on my inquiry of the person or persons who manage the system, or those persons directly responsible for gathering the information, the information submitted is, to the best of my knowledge and belief, true, accurate, and complete. I am aware that there are significant penalties for submitting false information including the possibility of a fine and imprisonment for knowing violations.	Date Completed
Title of Officer		Signature of Principal Executive Officer or Authorized Agent

STATE OF WEST VIRGINIA
NATIONAL POLLUTANT DISCHARGE ELIMINATION SYSTEM
SMALL FACILITY SEWAGE SLUDGE MANAGEMENT REPORT

FACILITY NAME (Shenandoah Junction WWTP)SHENANDOAH JUNCTION PUBLIC SEWER
ADDRESS 270 Industrial Blvd, Kearneysville, WV 25430

DESIGN FLOW 18,000 gpd
REGISTRATION NO WVG550533
REPORT YEAR _____

LIQUID SLUDGE

Amount Removed From Facility This Year(Gallons) _____
Frequency of Removal(Occurrences per Year) _____
Liquid Sludge Removed By _____
Septage Hauler Registration Number _____

DRY SLUDGE AND SAND

Amount of Dry Sewage Sludge, Sand, or Other Filter Media Removed This Year(Tons) _____
Method of Disposal _____
Location of Disposal _____

POLISHING POND CLEANING

Amount Removed This Year(Gallons) _____
Liquid Sludge Removed By _____
Method of Disposal _____
Location of Disposal _____

ADDITIONAL COMMENTS OR EXPLANATION _____

I certify under penalty of law that the sewage management practices are requirements of Federal regulations 40 CFR Part 503 and state sludge regulations Title 33, Series 2 have been met and that all sewage sludge disposed from this facility during this reporting period is reconciled and accounted for in this sewage sludge management report. This determination has been made under my direction and supervision in accordance with the system designed to ensure that qualified personnel properly gather and evaluate the information used to determine that these requirements have been met.

I also certify that this document and all the attachments were prepared under my direction or supervision, and that this information is, to the best of my knowledge and belief, true, accurate, and complete. I am aware that there are significant penalties for false certification including the possibility of fine and imprisonment.

OFFICIAL _____
TITLE _____
SIGNATURE _____
DATE _____

REQUEST NO. 3. Provide a copy of all Consent Decrees or other enforcement actions issued by the WV DEP which are currently in effect for this treatment facility.

RESPONSE: See attached.

RESPONSE PREPARED BY, AND WHO COULD TESTIFY: Lee Snyder, President of Shenandoah Junction Public Sewer, Inc.

DATE RESPONSE PREPARED: November 14, 2017

RECEIVED

JAN 23 2017

ENVIRONMENTAL
ENFORCEMENT
Charleston

west virginia department of environmental protection

Division of Water and Waste Management
601 57th Street SE
Charleston, WV 25304
Phone: (304) 926-0470
Fax: (304) 926-0488

Earl Ray Tomblin, Governor
Randy C. Huffman, Cabinet Secretary
www.dep.wv.gov

CONSENT ORDER
ISSUED UNDER THE
WATER POLLUTION CONTROL ACT
WEST VIRGINIA CODE, CHAPTER 22, ARTICLE 11

TO: SJPS, Inc.
Mr. B. Lee Snyder
270 Industrial Blvd
Kearneysville, WV 25430

DATE: December 30, 2016

ORDER NO.: 8581

INTRODUCTION

This Consent Order is issued by the Director of the Division of Water and Waste Management (hereinafter "Director"), under the authority of West Virginia Code, Chapter 22, Article 11, Section 1 et seq. to SJPS, Inc. (hereinafter "SJPS").

FINDINGS OF FACT

In support of this Order, the Director hereby finds the following:

1. SJPS operates a wastewater treatment facility called Shenandoah Junction WWTP located in Shenandoah Junction, Jefferson County, West Virginia. SJPS was reissued WV/NPDES Water Pollution Control Permit No. WV0103110, Registration No. WVG550533, on July 11, 2011. The WV/NPDES permit was administratively extended until March 31, 2016.

2. On April 2, 2014, SJPS and West Virginia Department of Environmental Protection (WVDEP) entered into Order No. 7964. The Order was issued in response to SJPS' failure to report a spill and failure to submit a written report regarding the spill.

3. On November 10, 2015, SJPS' WV/NPDES permit application was received by WVDEP personnel.

4. On February 17, 2016, WVDEP personnel conducted an inspection of the facility. During the inspection, violations of the following sections of WV Legislative Rules and SJPS' WV/NPDES permit were observed and documented:

a. Appendix A.II.1- SJPS failed to properly operate and maintain the sand filtering system. Specifically, debris was observed on the overflow pipe.
b. 47CSR2 Section 3.2.b and Appendix A.I.12 –SJPS caused conditions not allowable in waters of the State by creating distinctly visible deposits and sludge banks.

As a result of the aforementioned violations, Notice of Violation (NOV) Nos. w16-19-012-mkk and w16-19-011-mkk were issued to SJPS.

5. On April 8, 2016, WVDEP personnel notified SJPS that its WV/NPDES permit could not be reissued, because the business was classified with the WV Secretary of State as "revoked" due to SJPS' failure to file annual reports.

6. On April 14, 2016, WVDEP personnel conducted an inspection of the facility. During the inspection, violations of the following sections of WV Legislative Rules and WV State Code were observed and documented:

   a. 47CSR11 Section 2.2.a-SJPS failed to provide immediate notification to the Office of Water Resources of a spill, as evidenced by sludge worms and solids observed in the stream.
   b. 22-11-8 and 47CSR10 Section 3.1 – SJPS was discharging into waters of the State without authorization pursuant to a valid WV/NPDES permit.
   c. 47CSR2 Section 3.2.b-SJPS caused conditions not allowable in waters of the State by creating distinctly visible deposits and sludge banks.

   As a result of the aforementioned violations, NOV Nos. w16-19-038-mkk and w16-19-037-mkk were issued to SJPS.

7. On June 22, 2016, WVDEP personnel conducted a review of facility records. During this review, it was determined that the aforementioned WV/NPDES permit had not been reissued, because SJPS continued to be classified as "revoked" with the WV Secretary of State. In addition, the following violations of the terms and conditions of SJPS' WV/NPDES permit from the time period of April 1, 2014 through March 31, 2016 were observed:

   a. Section A – Two (2) minor exceedances of SJPS' permit parameters were observed and documented (Table 1).

8. On September 29, 2016, SJPS submitted financial documents to WVDEP. The records were used to perform an economic analysis which evaluated SJPS' ability to pay a civil administrative penalty.

9. On October 5, 2016, WVDEP personnel met with representatives of SJPS to discuss the terms and conditions of the Order.

10. On October 18, 2016, the aforementioned WV/NPDES permit was reissued.

Chief Inspector
Environmental Enforcement - Mail Code #031328
WV-DEP
601 57th Street SE
Charleston, WV 25304

OTHER PROVISIONS

1. SJPS hereby waives its right to appeal this Order under the provisions of Chapter 22, Article 11, Section 21 of the Code of West Virginia. Under this Order, SJPS agrees to take all actions required by the terms and conditions of this Order and consents to and will not contest the Director's jurisdiction regarding this Order. However, SJPS does not admit to any factual and legal determinations made by the Director and reserves all rights and defenses available regarding liability or responsibility in any proceedings regarding SJPS other than proceedings, administrative or civil, to enforce this Order.

2. The Director reserves the right to take further action if compliance with the terms and conditions of this Order does not adequately address the violations noted herein and reserves all rights and defenses which he may have pursuant to any legal authority, as well as the right to raise, as a basis for supporting such legal authority or defenses, facts other than those contained in the Findings of Fact.

3. If any event occurs which causes delay in the achievement of the requirements of this Order, SJPS shall have the burden of proving that the delay was caused by circumstances beyond its reasonable control which could not have been overcome by due diligence (i.e., force majeure). Force majeure shall not include delays caused or contributed to by the lack of sufficient funding. Within three (3) working days after SJPS becomes aware of such a delay, notification shall be provided to the Director/Chief Inspector and SJPS shall, within ten (10) working days of initial notification, submit a detailed written explanation of the anticipated length and cause of the delay, the measures taken and/or to be taken to prevent or minimize the delay, and a timetable by which SJPS intends to implement these measures. If the Director agrees that the delay has been or will be caused by circumstances beyond the reasonable control of SJPS (i.e., force majeure), the time for performance hereunder shall be extended for a period of time equal to the delay resulting from such circumstances. A force majeure amendment granted by the Director shall be considered a binding extension of this Order and of the requirements herein. The determination of the Director shall be final and not subject to appeal.

4. Compliance with the terms and conditions of this Order shall not in any way be construed as relieving SJPS of the obligation to comply with any applicable law, permit, other order, or any other requirement otherwise applicable. Violations of the terms and conditions of this Order may subject SJPS to additional penalties and injunctive relief in accordance with the applicable law.

5. The provisions of this Order are severable and should a court or board of competent jurisdiction declare any provisions to be invalid or unenforceable, all other provisions shall remain in full force and effect.

6. This Order is binding on SJPS, its successors and assigns.

7. This Order shall terminate upon SJPS' notification of full compliance with the "Order for Compliance" and verification of this notification by WVDEP.

Mr. B. Lee Snyder
SJPS, Inc.

Date

Public Notice begin:

Date

Public Notice end:

Date

Scott G. Mandirola, Director
Division of Water and Waste Management

Date

Table One: SJPS DMR Exceedance Summary

Outlet 001 DMR Exceedances - AVG. MONTHLY - 4/1/14 through 3/31/16						Degree of Noncompliance		
Date	Parameter	Units	Permitted avg. monthly	Reported avg. monthly	% Exceedance	Min	Mod	Maj
6/15	BOD	mg/l	30	31	3%	X	-	-

Outlet 001 DMR Exceedances - MAX. DAILY - 4/1/14 through 3/31/16						Degree of Noncompliance		
Date	Parameter	Units	Permitted max. daily	Reported max. daily	% Exceedance	Min	Mod	Maj
6/15	BOD	mg/l	60	65	8%	X	-	-

Outlet 001 Totals	Degree of Noncompliance		
	Min	Mod	Maj
	2	0	0

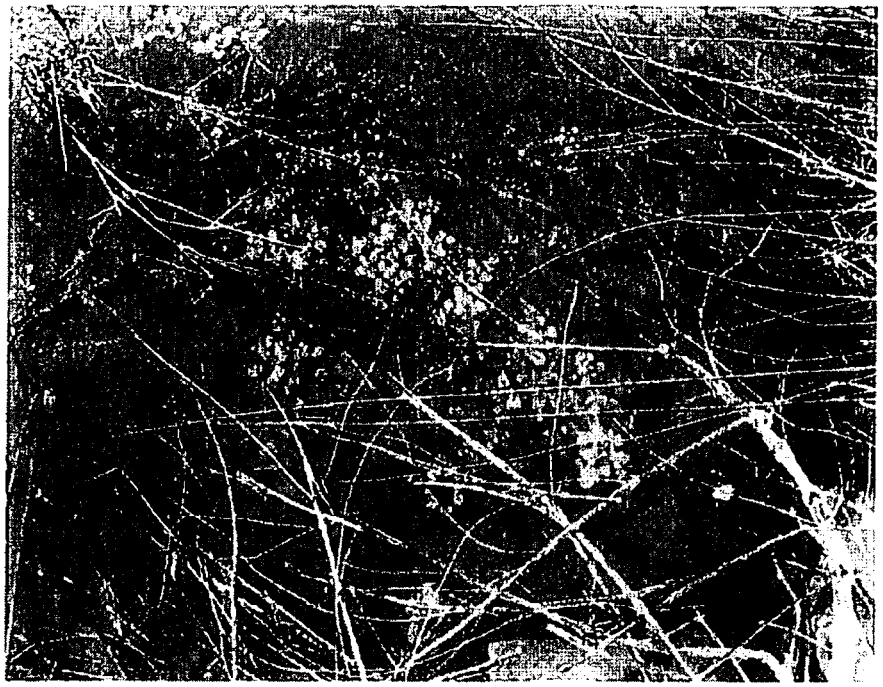

Sludge at the end of the outlet pipe.

Sludge at the end of the outlet pipe.

Basin 1 - evidence of a bypass - rags and discoloration on the overflow pipe.

Basin 2 - full of water and frozen

SJPS 4-14-16

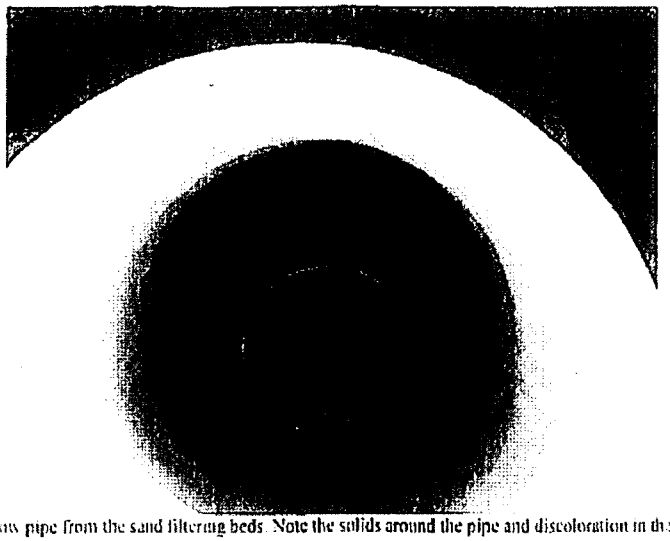

Overflow pipe from the sand filtering beds. Note the solids around the pipe and discoloration in the pipe

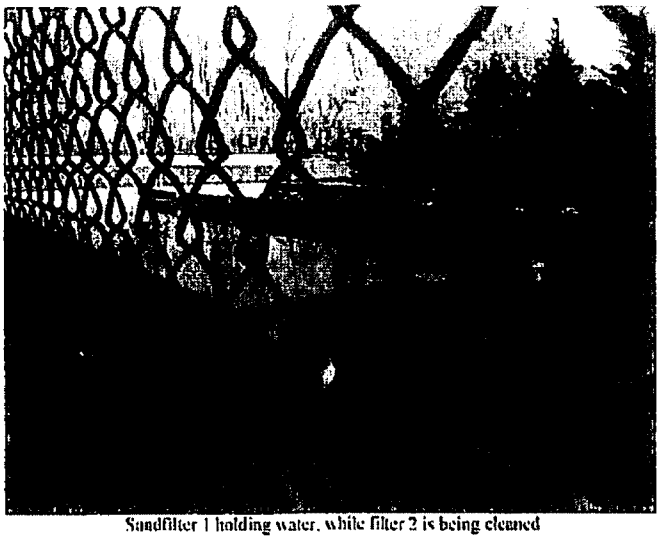

Sandfilter 1 holding water, while filter 2 is being cleaned

SJPS 4-14-16

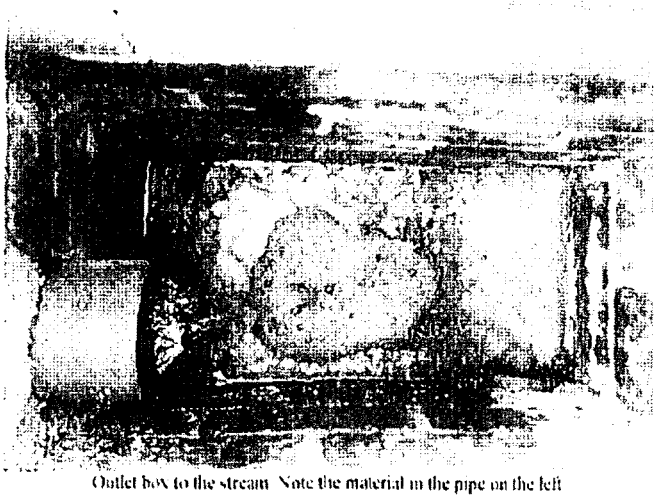

Outlet box to the stream Note the material in the pipe on the left

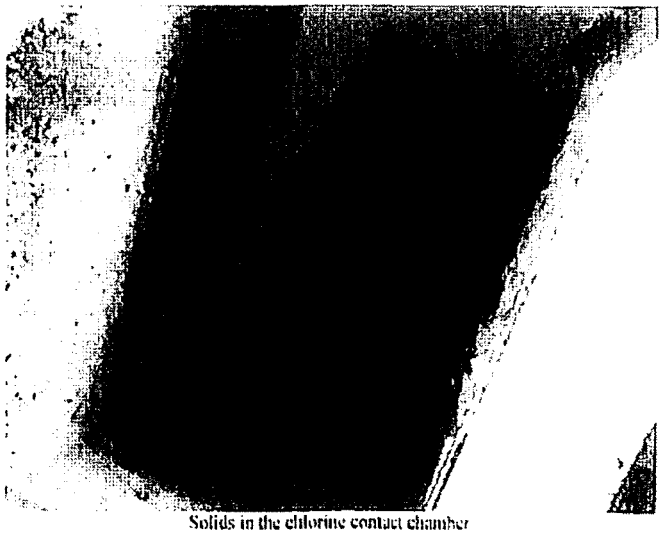

Solids in the chlorine contact chamber

SJPS 4-14-16

Brown staining on the chlorine feeder tubes.

Sludge worms in the stream.

SJPS 4-14-16

Outlet 001 with sludge worms and suds

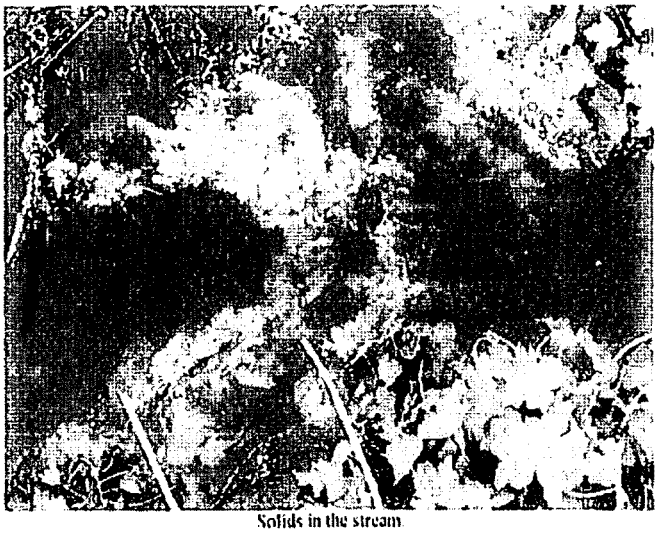

Solids in the stream

SJPS 4-14-16

Solids and suds in the stream

Base Penalty Calculation

(pursuant to 47CSR1-6.1)

Responsible Party: SJPS, Inc. **Receiving Stream:** _____

Treatment System Design Maximum Flow: _____ **MGD**

Treatment System Actual Average Flow: _____ **MGD** (if known)

Enter FOF# and rate each finding as to Potential and Extent.

1)	Potential for Harm Factor	Factor Range	FOF# 4a	4b	6a	6b	6c	7a							
a)	Amount of Pollutant Released	1 to 3	1	1	1	1	1	1							
b)	Toxicity of Pollutant	0 to 3	1	1	0	1	1	1							
c)	Sensitivity of the Environment	0 to 3	1	1	0	1	1	1							
d)	Length of Time	1 to 3	1	1	1	1	2	1							
e)	Actual Exposure and Effects thereon	0 to 3	1	1	0	1	1	1							
	Average Potential for Harm Factor		1	1	0.4	1	1.2	1	No	No	No	No	No	No	No
2)	**Extent of Deviation Factor**	Factor Range													
	Degree of Non-Compliance	1 to 3	3	3	3	1	3	1							

Potential for Harm Factors:

1)c - Sensitivity of the Environment Potentially Affected (0 for "dead" stream)

1)d - Length of Time of Violation

1)e - Actual Human/Environmental Exposure and Resulting Effects thereon

Examples/Guidance:

Note: Rate as 1 for Minor, 2 for Moderate and 3 for Major. Rate as 0 if it does not apply.

Minor = exceedance of permit limit by <=40% for Avg. Monthly or <=100% for Daily Max., exceed numeric WQ standard by <= 100%, or report doesn't contain some minor information.

Moderate = exceedance of permit limit by >= 41% and <= 300% for Avg. Monthly , >= 101% and <= 600% for Daily Max., exceed numeric WQ standard by >= 101% and <= of 600% or report doesn't fully address intended subject matter

Major = exceedance of permit limit by >= 301% for Avg. Monthly, >= 601% for Daily Max., exceed numeric WQ standard by >= 601%, failure to submit a report, failure to obtain a permit, failure to report a spill, etc. Note that a facility in SNC should be rated as major for length of time and degree of non-compliance.

Narrative WQ standard violations - case-by-case.

Continue rating Findings of Facts (FOF) here, if necessary. Otherwise, continue on Page 3.

1)	Potential for Harm Factor	Factor Range	FOF#												
a)	Amount of Pollutant Released	1 to 3													
b)	Toxicity of Pollutant	0 to 3													
c)	Sensitivity of the Environment	0 to 3													
d)	Length of Time	1 to 3													
e)	Actual Exposure and Effects thereon	0 to 3													
	Average Potential for Harm Factor		No	No	No	No	No	No	No	No	No	No	No	No	No
2)	Extent of Deviation Factor	Factor Range													
	Degree of Non-Compliance	1 to 3													

Penalty Adjustment Factors

(pursuant to 47CSR1-6.2)

Penalty Adjustment Factor

6.2.b.1 - Degree of or absence of willfulness and/or negligence - 0% to 30% increase
6.2.b.4 - Previous compliance/noncompliance history - 0% to 100% increase - based upon review of last three (3) years - Warning = maximum of 5% each, N.O.V. = maximum of 10% each, previous Order = maximum of 25% each - Consistent DMR violations for <1 year = 10% maximum, for >1 year but <2 years = 20% maximum, for >2 years but <3 years = 30% maximum, for >3 years = 40 % maximum

6.2.b.6 - Economic benefits derived by the responsible party (increase to be determined)

6.2.b.7 - Public Interest (increase to be determined)

6.2.b.8 - Loss of enjoyment of the environment (increase to be determined)

6.2.b.9 - Staff investigative costs (increase to be determined)
6.2.b.10 - Other factors

Size of Violator: 0 - 50% decrease

NOTE: This factor is not available to discharges that are causing a water quality violation. This factor does not apply to a commercial or industrial facility that employees or is part of a corporation that employees more than 100 individuals.

Avg. Daily WW Discharge Flow (gpd)	% Reduction Factor
< 5,000	50
5,000 to 9,999	40
10,000 to 19,999	30
20,000 to 29,999	20
30,000 to 39,999	10
40,000 to 99,999	5
> 100,000	0

Additional Other factors to be determined for increases or decreases on a case-by-case basis.

Public Notice Costs (cost for newspaper advertisement)
6.2.b.2 - Good Faith - 10% decrease to 10% increase
6.2.b.3 - Cooperation with the Secretary - 0% to 10% decrease
6.2.b.5 - Ability to pay a civil penalty - 0% to 100% decrease

Base Penalty Adjustments

(pursuant to 47CSR1-6.2)

Penalty Adjustment Factor	% Increase	% Decrease	Base Penalty Adjustments
6.2.b.1 - Willfulness and/or negligence -	10		$1,290
6.2.b.4 - Compliance/noncompliance history	35		$4,515
6.2.b.6 - Economic benefits - (flat monetary increase)			$0
6.2.b.7 - Public Interest - (flat monetary increase)			$0
6.2.b.8 - Loss of enjoyment - (flat monetary increase)			$0
6.2.b.9 - Investigative costs - (flat monetary increase)			$0
6.2.b.10 - Other factors (size of violator)			$0
6.2.b.10 - Additional Other Factors - Increase (flat monetary increase)			$0
6.2.b.10 - Additional Other Factors - Decrease (flat monetary decrease)			$0
Public Notice Costs (flat monetary increase)	$30		$30
6.2.b.2 - Good Faith - Increase			$0
6.2.b.2 - Good Faith - Decrease			$0
6.2.b.3 - Cooperation with the Secretary			$0
6.2.b.5 - Ability to Pay		97.17	($12,535)
Penalty Adjustments			($6,700)
Penalty =			**$6,200**

Estimated Economic Benefit Item	Estimated Benefit ($)
Monitoring & Reporting	
Installation & Maintenance of Pollution Control Equipment	
O&M expenses and cost of equipment/materials needed for compliance	
Permit Application or Modification	
Competitive Advantage	
Estimated Economic Benefit	**$0**

Comments: Economic benefit not warranted.

Shenandoah Junction Public Sewer, Inc.

270 Industrial Blvd.
Kearneysville, WV 25430

May 8, 2017

Chief Inspector
Environmental Enforcement
Mail Code No. 031328
West Virginia Department of
Environmental Protection
601 57th Street SE
Charleston, West Virginia 25304

RECEIVED
MAY 9 2017
ENVIRONMENTAL
ENFORCEMENT
Charleston

Re: Plan of Corrective Action regarding Consent Order No. 8581

Dear Sir,

Please accept the following as the Plan of Corrective Action ("POCA") submitted by Shenandoah Junction Public Sewer, Inc. ("Public Sewer") in compliance with the terms and conditions of Order No. 8581 ("Order") entered into by Public Sewer and the West Virginia Department of Environmental Protection ("WVDEP"), effective March 8, 2017.

Public Sewer has been diligently pursuing various options to assure compliance with all terms and conditions of its WV/NPDES permit and pertinent laws and rules, as required by the Order. However, the recent tightening of effluent discharge limits in the facility's most recent permit for winter BOD from 30 mg/l to 10 mg/l and summer BOD from 30 mg/l to 5 mg/l, and further tightening of winter ammonia nitrogen effluent discharge limits to 6 mg/l and summer limits to 3 mg/l has made operating the facility in conformity with the permit a great deal more difficult. Still, the facility continues to generally operate in compliance with the requirements of the permit.

Current operational issues center mostly in and around winter operations during extreme cold weather. Facility filters struggle to properly operate due to accumulations of sludge in drying beds. This accumulation is generally related to cold weather and the inability of the facility during cold weather to timely dry the sludge and allow for its removal.

To address these issues, Public Sewer proposes to take the following actions pursuant to the time frames set forth below:

1. To commence immediately upon approval by WVDEP, empty tertiary clarifier tank on a weekly basis;

2. Within 60 days of approval by the WVDEP, increase blower output in order to increase aeration tank dissolved oxygen; and

3. Within 60 days of approval by the WVDEP, add aeration to chlorine contact tank.

Public Sewer would be happy to discuss the specifics of each of these items at a mutually convenient time.

Public Sewer is also reviewing future longer term options for the facility and its customers, which could be prohibitively expensive, require Public Service Commission approval, and/or require third party provider approval. As a result, there is no way for Public Sewer to provide any assurances as to by what date these options could be implemented.

As part of its ongoing efforts to address sewer and sewer capacity issues related to the Public Sewer facility and future projects, Public Sewer would be agreeable to regular meetings and/or the provision of regular updates to the WVDEP regarding its progress toward longer term solutions for Public Sewer and the public customers it serves. Public Sewer would be happy to meet with WVDEP to discuss these options in further detail at a time convenient to the parties.

Regards,

B. Lee Snyder, President,
Shenandoah Junction Public Sewer, Inc.

cc: Armando F. Benincasa, Esq.
E. Dandridge McDonald, Esq.
Stephanie Reel
Jeff Pippel

?

RECEIVED APR 21 2017

west virginia department of environmental protection

Environmental Enforcement
601 57th Street SE
Charleston, WV 25304
Telephone: (304) 926-0470 Fax: (304) 926-0488

Jim Justice, Governor
Austin Caperton, Cabinet Secretary
www.dep.wv.gov

April 18, 2017

SJPS, Inc.
Mr. B. Lee Snyder
270 Industrial Drive
Kearneysville, WV 25430

CERTIFIED RETURN RECEIPT REQUESTED

91 7199 9991 7037 0981 9859

Re: Plan of Corrective Action – Order No. 8581

Dear Mr. Snyder:

This correspondence is in regard to Order No. 8581, issued to SJPS Inc., which became effective on March 8, 2017. Item No. 2 of the Order For Compliance Section of the Order requires that an approvable Plan of Corrective Action (POCA) be submitted to West Virginia Department of Environmental Protection (WVDEP) within 30 days of the effective date of the Order. To date, SJPS, Inc. has failed to comply with the terms and conditions of the Order by failing to submit an approvable POCA within the required timeframe, a violation of WV State Code 22-11-1 et seq. Continued failure to submit an approvable POCA will result in additional enforcement action. The POCA, as described in the aforementioned Order, shall be immediately submitted to:

Chief Inspector
Environmental Enforcement - Mail Code #031328
WVDEP
601 57th Street SE
Charleston, WV 25304

Should you have any questions regarding this matter, please contact me at (304) 926-0470.

Sincerely,

David C. Simmons
Assistant Chief Inspector

cc: Yogesh Patel, Director, DWWM (via e-mail)
Jeremy W. Bandy, Chief Inspector, EE (via e-mail)
Robin C. Dolly, Assistant Chief Inspector, EE/WW (via e-mail)
Debora J. Peters, Environmental Resources Specialist, EE (via e-mail)
Michael Kanehl, Environmental Inspector, EE/WW (via e-mail)
Sally Brown, Secretary, EE (via-email)
Shyrel Moellendick, MSSS, EE (via e-mail)

RECEIVED MAY 17 2017

dep

west virginia department of environmental protection

Environmental Enforcement
601 57th Street SE
Charleston, WV 25304
Telephone: (304) 926-0470 Fax: (304) 926-0488

Jim Justice, Governor
Austin Caperton, Cabinet Secretary
www.dep.wv.gov

May 15, 2017

SJPS, Inc.
Mr. B. Lee Snyder
270 Industrial Drive
Kearneysville, WV 25430

CERTIFIED RETURN RECEIPT REQUESTED
91 7199 9991 7037 7331 0115

Re: Plan of Corrective Action – Order No. 8581

Dear Mr. Snyder:

West Virginia Department of Environmental Protection (WVDEP) has received your Plan of Corrective Action, dated May 8, 2017, as required by Item No. 2 under the Order for Compliance section of Order No. 8581.

WVDEP has determined that the enclosed Plan of Corrective Action is acceptable, is hereby approved, and has been incorporated as a term and condition of the Order. Failure to adhere to the approved plan and schedule is a violation of the Order.

Should you have any questions regarding this matter, please contact me at (304) 926-0470.

Sincerely,

Jeremy W. Bandy
Chief Inspector

Enclosure
cc: David C. Simmons, Assistant Chief Inspector, EE (via e-mail)
Robin C. Dolly, Assistant Chief Inspector, EE (via e-mail)
Debora J. Peters, Environmental Resources Specialist, EE (via e-mail)
Michael Kanehl, Environmental Inspector, EE/WW (via e-mail)
Shyrel Moellendick, MSSS, EE (via e-mail)

Shenandoah Junction Public Sewer, Inc.

270 Industrial Blvd.
Kearneysville, WV 25430

May 8, 2017

Chief Inspector
Environmental Enforcement
Mail Code No. 031328
West Virginia Department of
Environmental Protection
601 57th Street SE
Charleston, West Virginia 25304

RECEIVED
MAY 9 2017
ENVIRONMENTAL
ENFORCEMENT
Charleston

Re: Plan of Corrective Action regarding Consent Order No. 8581

Dear Sir,

Please accept the following as the Plan of Corrective Action ("POCA") submitted by Shenandoah Junction Public Sewer, Inc. ("Public Sewer") in compliance with the terms and conditions of Order No. 8581 ("Order") entered into by Public Sewer and the West Virginia Department of Environmental Protection ("WVDEP"), effective March 8, 2017.

Public Sewer has been diligently pursuing various options to assure compliance with all terms and conditions of its WV/NPDES permit and pertinent laws and rules, as required by the Order. However, the recent tightening of effluent discharge limits in the facility's most recent permit for winter BOD from 30 mg/l to 10 mg/l and summer BOD from 30 mg/l to 5 mg/l, and further tightening of winter ammonia nitrogen effluent discharge limits to 6 mg/l and summer limits to 3 mg/l has made operating the facility in conformity with the permit a great deal more difficult. Still, the facility continues to generally operate in compliance with the requirements of the permit.

Current operational issues center mostly in and around winter operations during extreme cold weather. Facility filters struggle to properly operate due to accumulations of sludge in drying beds. This accumulation is generally related to cold weather and the inability of the facility during cold weather to timely dry the sludge and allow for its removal.

To address these issues, Public Sewer proposes to take the following actions pursuant to the time frames set forth below:

1. To commence immediately upon approval by WVDEP, empty tertiary clarifier tank on a weekly basis;

2. Within 60 days of approval by the WVDEP, increase blower output in order to increase aeration tank dissolved oxygen; and

3. Within 60 days of approval by the WVDEP, add aeration to chlorine contact tank.

Public Sewer would be happy to discuss the specifics of each of these items at a mutually convenient time.

Public Sewer is also reviewing future longer term options for the facility and its customers, which could be prohibitively expensive, require Public Service Commission approval, and/or require third party provider approval. As a result, there is no way for Public Sewer to provide any assurances as to by what date these options could be implemented.

As part of its ongoing efforts to address sewer and sewer capacity issues related to the Public Sewer facility and future projects, Public Sewer would be agreeable to regular meetings and/or the provision of regular updates to the WVDEP regarding its progress toward longer term solutions for Public Sewer and the public customers it serves. Public Sewer would be happy to meet with WVDEP to discuss these options in further detail at a time convenient to the parties.

Regards,

B. Lee Snyder, President,
Shenandoah Junction Public Sewer, Inc.

cc: Armando F. Benincasa, Esq.
E. Dandridge McDonald, Esq.
Stephanie Reel
Jeff Pippel

REQUEST NO. 4. Provide copies of all "Notice of Violation" issued by the WV DEP for this facility for the period of January 1, 2016 through the present. Indicate the current status of each violation as either "resolved" or "outstanding".

RESPONSE: See attached. We believe that the Notices of Violations have been resolved. However, the challenges of operating this plant at its current high rate of loading still exist.

RESPONSE PREPARED BY, AND WHO COULD TESTIFY: Lee Snyder, President of Shenandoah Junction Public Sewer, Inc.

DATE RESPONSE PREPARED: November 14, 2017

west virginia department of environmental protection

Environmental Enforcement
22288 Northwestern Pike
Romney, WV 26757-8005
Telephone: (304) 822-7266 Fax: (304) 822-3687

Earl Ray Tomblin, Governor
Randy C. Huffman, Cabinet Secretary
www.dep.wv.gov

March 10, 2016

SJPS, Inc.
Attn: B. Lee Snyder
270 Industrial Boulevard
Kearneysville, WV 25430

Certified Return Receipt Requested
Cert # 7015 0640 0000 8937 6204

Dear Mr. Snyder:

Enclosed is the compliance inspection report conducted at the Shenandoah Junction WWTP (WVG550533) on February 17, 2016. A copy of this report is being forwarded to the U.S. Environmental Protection Agency, Region III and the West Virginia Department of Environmental Protection Division of Water and Waste Management.

Your immediate attention should be given to the deficiencies listed in the report summary. Failure to take corrective action to eliminate the deficiencies may result in enforcement action as outlined in Chapter 22, Article 11 of the West Virginia Code.

Within twenty (20) days of receipt of this letter, please advise this office in writing of your plans to bring your facility into compliance. The response should be sent to my attention at 22288 Northwestern Pike, Romney, WV 26757.

If you have any questions, please contact me at (304) 822-7266.

Sincerely,

Robin C. Dolly
Environmental Inspector Supervisor

Enclosure

cc: Michael Kanehl, Environmental Inspector EE/WW (via e-mail)
Shyrel Moellendick, MSSS I, EE/WW (via e-mail)

Rev. 01/00; 09/03

State of West Virginia
Department of Environmental Protection
Environmental Enforcement

Time In 10:15aNo. _____
Time Out 11:45a
County Jefferson

Facility Inspection Report

Facility Name Shenandoah Junction WWTP Location Shenandoah Junction

Permit No. WVG550533 Exp. Date 03/31/16 Design Flow 0.018MGD

Permittee SJPS Inc. Present Flow N/D

Address 270 Industrial Blvd. Kearneysville, WV 25430 Weather Cold

☐ **Municipal Plant** ☐ **PSD** ☒ **Package Plant** ☐ **Ponds** ☐ **Other**

Evaluation codes: S - satisfactory; M-marginal; U-unsatisfactory; N/A-not applicable; N/O-not observed; N/D-not determined

01 Collection System	N/D	16 Pond-Stab.	N/A	31 Trickling Filter	N/A	46 Laboratory	N/D
02 Pump Stations	N/D	17 Pond -Polishing	N/A	32 Dosing Device	S	47 MSDS	N/D
03 Influent	N/D	18 Pond-Lagoon	N/A	33 Sludge Dewatering	N/D	48 Chemical Handling	N/D
04 Flow Meter	N/A	19 Aeration	S	34 Digester	N/D	49 HAZMAT	N/A
05 Trash Trap	N/A	20 Clarifier (s)	N/D	35 Sludge Disposal	N/D	50 Stormwater	N/A
06 Grease Trap	N/A	21 Scum Removal	N/D	36 Trash Disposal	N/D	51 Nonpoint	N/A
07 Bar Screen	N/D	22 Chemical Feeders	N/A	37 Ash Disposal	N/A	52 Shipping/Recvg	N/A
08 Comminutor	N/A	23 Filtration	U	38 Oil Disposal	N/D	53 Monitoring Wells	N/A
09 EQ Basin	N/A	24 Chlorination	N/D	39 General Housekeeping	S	54 MW Reports	N/A
10 Holding Tank (s)	N/A	25 Disinfection	N/D	40 Surface H2O Diversion	N/D	55 SPCC	N/A
11 Clarifier (s)	N/A	26 Contact Chamber	N/D	41 Dike Condition	N/A	56 BMP's	N/A
12 Separator (s)	N/A	27 Post Aeration	N/A	42 Fence	S	57 Process Controls	N/D
13 SSO/CSO/Bypass	N/A	28 Dechlorination	N/D	43 Records	S	58 MLSS	N/D
14 Grit Removal	N/A	29 UV	N/A	44 Discharge Limitations	U	59 Compliance Asst	N/A
15 I&I	N/D	30 SBR(s)	N/A	45 Auxiliary Power	N/A	60	

Discharge #	Flow	pH	C12res	DO	Odor	Marker	Appearance	Samples	Photos	Evaluation
001	**N/D**	**N/D**	**N/D**	**N/D**	**S**	**S**	**U**	**N**	**Y**	**N/D**

Receiving Stream / Basin Elk Run

Comments / Deficiencies:
23: Both sandfiltering devices were full of water. Bed 1 was frozen. Bed 1 had evidence of bypas of the filtering system with rags and staining on the overflow pipe.
44: DMR excursion for BOD durin the 6/15 sampling period.

****WARNING!** You are hereby notified that the following remedial measures must be taken on or before: Comply with your WV/NPDES Permit**

Official Representative: __sent to permittee by mail_ Title_____ Inspector M. Kanehl Date 2/17/16

Number of NOV's issued on this date: 3 None: ☐

Copy distribution: Region, Facility, Charleston, Inspector

United States Environmental Protection Agency
Washington, D.C. 20460

EPA Water Compliance Inspection Report

Section A: National Data System Coding (ie PCS)

Transaction	Code	NPDES	Mo/Day/Yr	Inspection Type	Inspector	Facility Type
N	5	WVG550533	2/17/16	R	S	1

Remarks: WV0103110

Inspection Work Days	Facility Self-Monitoring Evaluation Rating	B1	QA	Reserved
1	U			

Section B: Facility Data

Name and Location of Facility Inspected:	Shenandoah Junction WWTP	**Entry Time:** 10:15am	**Permit Effective Date:** 07/11/11
Name(s) of On-SiteRepresentatives(s) Titles/Phone and Fax Numbers:	No one on site	**Exit Time/Date:** 2/17/16 11:45am	**Permit Expiration Date:** 03/31/16
Name, Address of Responsible Official/Title/Phone/Fax	B. Lee Snyder SJPS, Inc. 270 Industrial Blvd; Kearneysville, WV 25430	Contacted: Yes ☐ No ☒	**Other Facility Data:**

Section C: Areas Evaluated During Inspection
M - Marginal; N - No; N/A - Not Applicable; N/E - Not Evaluated; S - Satisfactory; U - Unsatisfactory; Y - Yes

S	Permit	S	Records/Reports	S	Fac. Site Review	N/A	Groundwater
N/A	Pretreatment	N/A	Flow Measurement	S	Laboratory	U	Eff/Receiving
N/A	Stormwater	N/A	Unpermitted Bypass	N/E	Sampling	N/A	Compliance Schedule
S	Self-Monitoring	N/A	Combined Sewer Overflow (CSO)	N/A	Sanitary Sewer Overflow (SSO)	U	Operations & Maintenance
S	Sludge Disposal	N/E	Pollution Prevention	N/A	Multi-Media	N/A	MS4

Section D: Summary of Findings / Comments
(Attach additional sheets of narrative and checklists, including Single Event Violation codes, as necessary)

SEV Codes	SEV Description

Name/Signature(s) of Inspectors(s) Michael Kanehl	**Agency/Office/Telephone/Fax** WVDEP 22288 Northwestern Pike Romney, WV 26757 p: 304-822-7266 f: 304-822-3687	**Date** 2/18/16
Signature of Management QA Reviewer Robin C. Dolly	**Agency/Office/Phone/Fax** WVDEP 22288 Northwestern Pike Romney, WV 26757 p: 304-822-7266 f: 304-822-3687	**Date** 2-22-16

Revised: March 2014

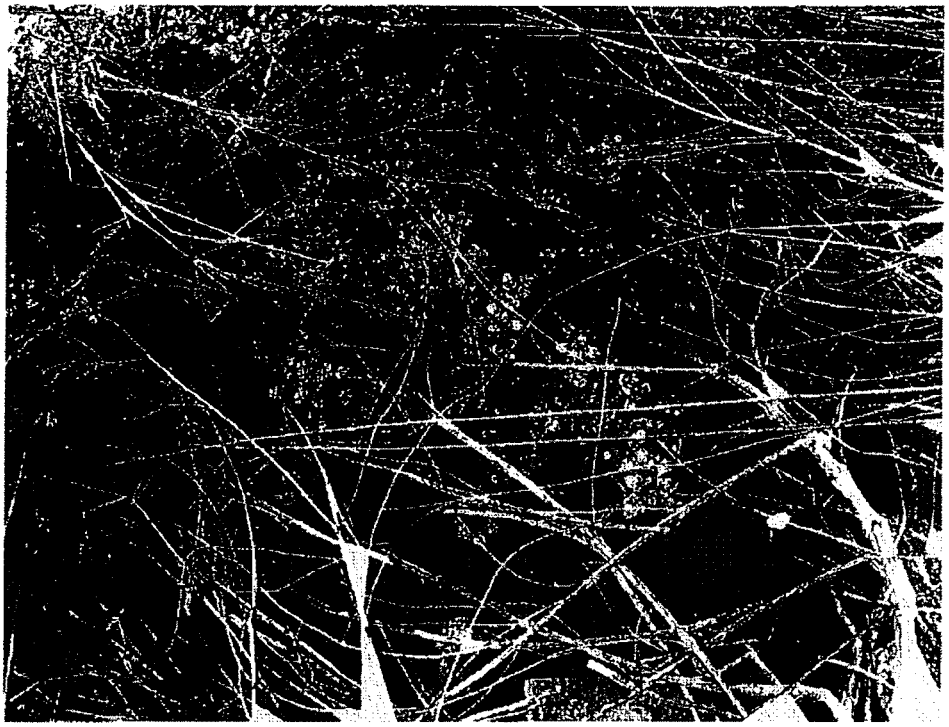

[illegible] of the wild type

[illegible]

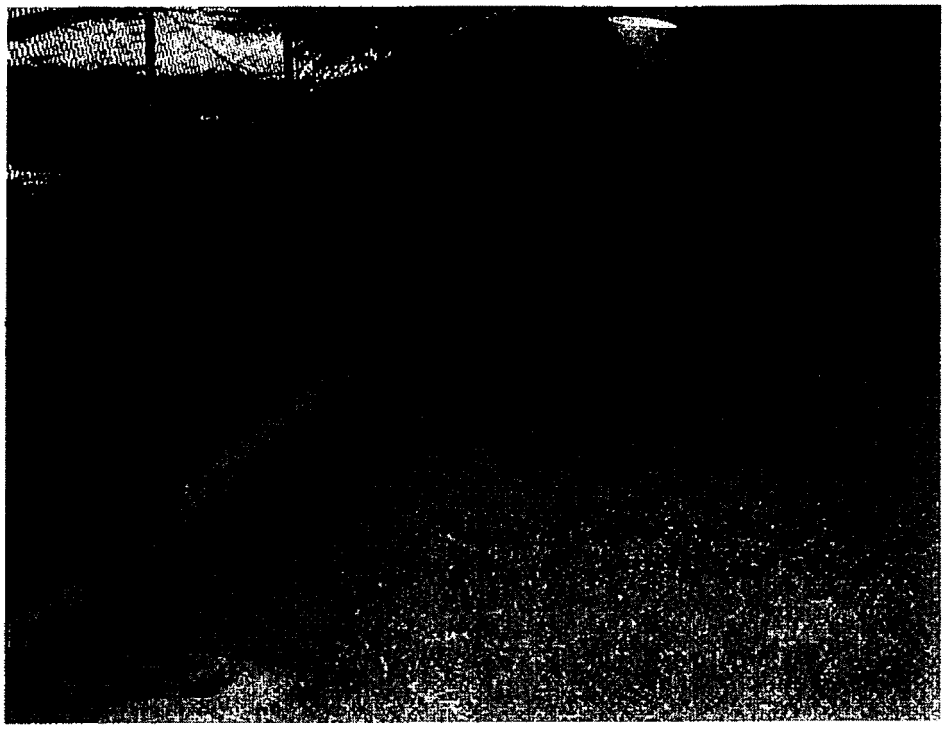

Basin 1 had evidence of a bypass. Rags & discoloration on overflow pipe.

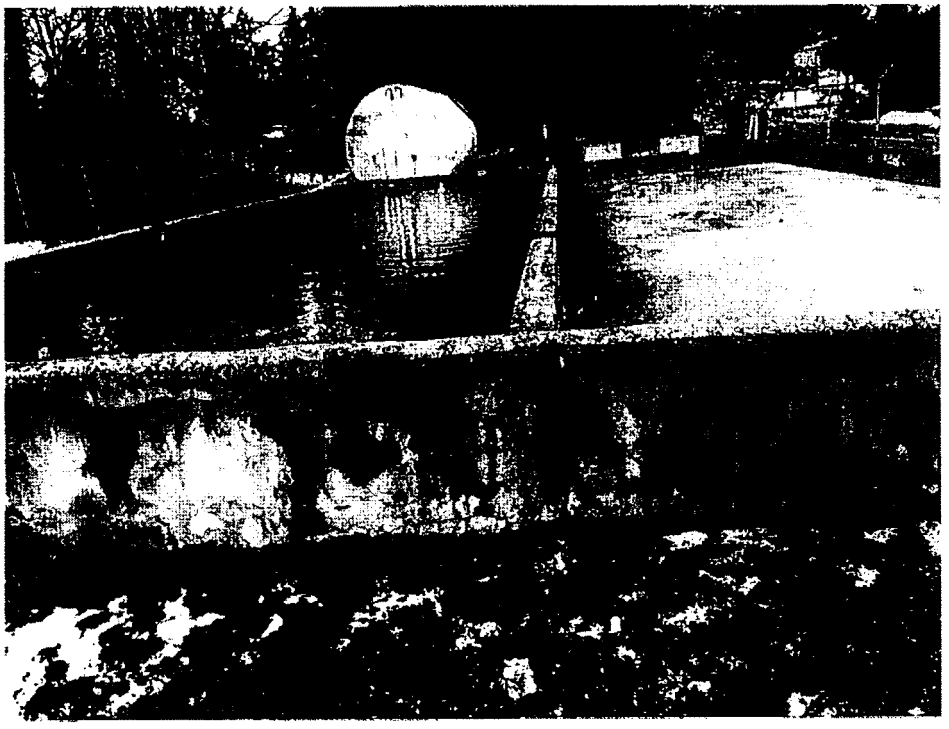

Basin 2 full of water and basin 2 frozen

STATE OF WEST VIRGINIA
Department of Environmental Protection
Environmental Enforcement

NOTICE OF VIOLATION

Violation No. **w16-19-011-mkk**

To the Operator or Agent of:

Facility Name: **Shenandoah Junction WWTP** Permit No. **WVG550533**

Permittee or Individual **SJPS Inc.**

Located at or near **Shenandoah Junction** in **Jefferson** County

Representative _____ Date **2/17/16** Time **10:30a**

Address / phone number **270 Industrial Blvd. Kearneysville, WV 25430**

Whereas, an inspection of the above named operation by the undersigned, duly authorized agent of the Secretary, at which the following described condition or practice exists, in violation of Chapter _____, Article _____, Section(s) _____ of the Code of West Virginia and/or Section(s) **47csr2-3** of the Rules and Regulations and/or Section(s) **Appx A-I-12** of the Permit referenced above promulgated thereunder in that you: **Violated the Legislative Rules Governing Water Quality "Causing Conditions Not Allowable in State Waters". The discharge from your facility was causing distinctly visible solids in the receiving stream**

The following corrective measures were discussed with you at the time of this inspection:

Within **20** days provide a written response to the inspector named below, at the address indicated, detailing the actions taken to abate this violation.

Received by:

Sent certified mail to permittee

Signature | Title

Michael Kanehl

Duly Authorized Agent / Inspector | **304-822-7266** Telephone | **michael.k.kanehl@wv.gov** E-mail

Send Response to the Inspector at the address indicated below:
WV Department of Environmental Protection
Environmental Enforcement / WW
22288 Northwestern Pike, Romney, WV 26757

Certified Mail Tracking #: **7015 0640 0000 8937 6204**

STATE OF WEST VIRGINIA
Department of Environmental Protection
Environmental Enforcement

NOTICE OF VIOLATION

Violation No. **w16-19-012-mkk**

To the Operator or Agent of:

Facility Name: **Shenandoah Junction WWTP** Permit No. **WVG550533**

Permittee or Individual **SJPS Inc.**

Located at or near **Shenandoah Junction** in **Jefferson** County

Representative _____ Date **2/17/16** Time **10:30a**

Address / phone number **270 Industrial Blvd. Kearneysville, WV 25430**

Whereas, an inspection of the above named operation by the undersigned, duly authorized agent of the Secretary, at which the following described condition or practice exists, in violation of Chapter _____, Article _____, Section(s) _____ of the Code of West Virginia and/or Section(s) _____ of the Rules and Regulations and/or Section(s) **Appx A** of the Permit referenced above promulgated thereunder in that you:
failed to comply with your WV/NPDES Permit by not:
reporting the bypass of the filtering system. (Appx-A-IV-2)
failed to properly operate and maintain the filtering system. (Appx-A-II-1)

The following corrective measures were discussed with you at the time of this inspection:

Within **20** days provide a written response to the inspector named below, at the address indicated, detailing the actions taken to abate this violation.

Received by:

Sent certified mail to permittee

Signature | Title

Michael Kanehl

Duly Authorized Agent / Inspector | **304-822-7266** Telephone | **michael.k.kanehl@wv.gov** E-mail

Send Response to the Inspector at the address indicated below:
WV Department of Environmental Protection
Environmental Enforcement / WW
22288 Northwestern Pike, Romney, WV 26757

Certified Mail Tracking #: **7015 0640 0000 8937 6204**

STATE OF WEST VIRGINIA
Department of Environmental Protection
Environmental Enforcement

NOTICE OF VIOLATION

Violation No. **w16-19-013-mkk**

To the Operator or Agent of:

Facility Name: **Shenandoah Junction WWTP** Permit No. **WVG550533**

Permittee or Individual **SJPS Inc.**

Located at or near **Shenandoah Junction** in **Jefferson** County

Representative _____ Date **2/17/16** Time **10:30a**

Address / phone number **270 Industrial Blvd. Kearneysville, WV 25430**

Whereas, an inspection of the above named operation by the undersigned, duly authorized agent of the Secretary, at which the following described condition or practice exists, in violation of Chapter _____, Article _____, Section(s) _____ of the Code of West Virginia and/or Section(s) _____ of the Rules and Regulations and/or Section(s) **A** of the Permit referenced above promulgated thereunder in that you:
had a DMR exceedence for BOD for the June 2015 sampling period.

The following corrective measures were discussed with you at the time of this inspection:

Within **20** days provide a written response to the inspector named below, at the address indicated, detailing the actions taken to abate this violation.

Received by:

Sent certified mail to permittee

Signature | Title

Michael Kanehl

Duly Authorized Agent / Inspector | **304-822-7266** Telephone | **michael.k.kanehl@wv.gov** E-mail

Send Response to the Inspector at the address indicated below:
WV Department of Environmental Protection
Environmental Enforcement / WW
22288 Northwestern Pike, Romney, WV 26757

Certified Mail Tracking #: **7015 0640 0000 8937 6204**

Rev 01/00; 09/03
State of West Virginia
Department of Environmental Protection
Environmental Enforcement

Time In 9amNo. _____
Time Out 9:45am
County Jefferson

Facility Inspection Report

Facility Name Shenandoah Junction WWTP Location Shenandoah Junction

Permit No. WVG550533 Exp. Date 03/31/16 Design Flow 0.018MGD

Permittee SJPS, INC. Present Flow N/D

Address 270 Industrial Blvd. Kearneysville, WV 25430 Weather Cold

☐ **Municipal Plant** ☐ **PSD** ☒ **Package Plant** ☐ **Ponds** ☐ **Other**

Evaluation codes: S - satisfactory; M-marginal; U-unsatisfactory; N/A-not applicable; N/O-not observed; N/D-not determined

01 Collection System	N/D	16 Pond-Stab.	N/A	31 Trickling Filter	N/A	46 Laboratory	N/D
02 Pump Stations	N/D	17 Pond -Polishing	N/A	32 Dosing Device	S	47 MSDS	N/D
03 Influent	S	18 Pond-Lagoon	N/A	33 Sludge Dewatering	N/D	48 Chemical Handling	N/D
04 Flow Meter	N/A	19 Aeration	S	34 Digester	S	49 HAZMAT	N/A
05 Trash Trap	N/A	20 Clarifier (s)	S	35 Sludge Disposal	S	50 Stormwater	N/A
06 Grease Trap	N/A	21 Scum Removal	N/D	36 Trash Disposal	N/D	51 Nonpoint	N/A
07 Bar Screen	S	22 Chemical Feeders	S	37 Ash Disposal	N/A	52 Shipping/Recvg	N/A
08 Comminutor	N/A	23 Filtration	M	38 Oil Disposal	N/D	53 Monitoring Wells	N/A
09 EQ Basin	N/A	24 Chlorination	S	39 General Housekeeping	S	54 MW Reports	N/A
10 Holding Tank (s)	N/A	25 Disinfection	N/D	40 Surface H2O Diversion	N/D	55 SPCC	N/A
11 Clarifier (s)	N/A	26 Contact Chamber	M	41 Dike Condition	N/A	56 BMP's	N/A
12 Separator (s)	N/A	27 Post Aeration	N/A	42 Fence	S	57 Process Controls	N/D
13 SSO/CSO/Bypass	N/A	28 Dechlorination	S	43 Records	S	58 MLSS	N/D
14 Grit Removal	N/A	29 UV	N/A	44 Discharge Limitations	S	59 Compliance Asst	N/A
15 I&I	N/D	30 SBR(s)	N/A	45 Auxiliary Power	N/A	60	

Discharge #	Flow	pH	C12res	DO	Odor	Marker	Appearance	Samples	Photos	Evaluation
001	**1gpm**	**N/D**	**N/D**	**N/D**	**S**	**S**	**U**	**N**	**Y**	**N/D**

Receiving Stream / Basin Elk Run

Comments / Deficiencies:

Facility permit expired on 3/31/16. Facility applied for renewal, but a "Tech Corr Requested" was required by the permittee. Permittee should contact DEP Permiting to complete the process.

Sludge worms and solids were observed in the stream. Facilty was contacted and two representivies was came to the plant and observed these finding.

****WARNING!** You are hereby notified that the following remedial measures must be taken on or before: Comply with your WV/NPDES Permit**

Official Representative: sent to permittee by mail Title_____ Inspector M. Kanehl Date 4/14/16

Number of NOV's issued on this date: 3 None: ☐

Copy distribution: Region; Facility; Charleston; Inspector

Pictures

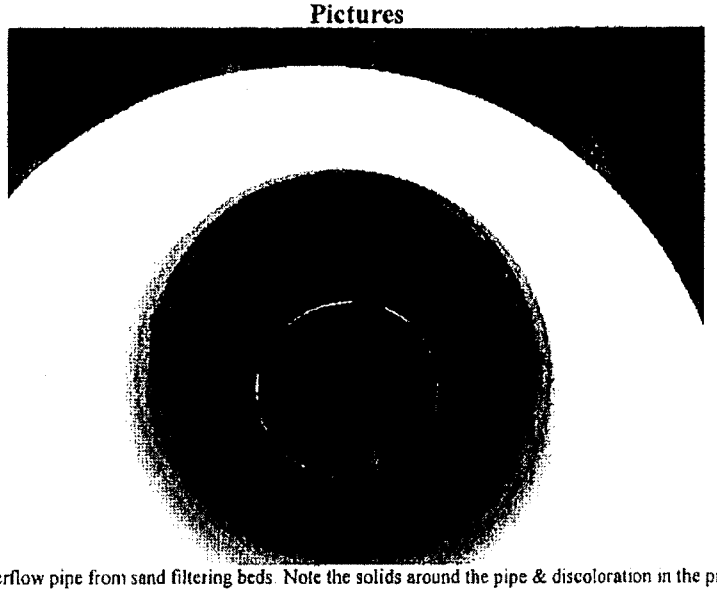

Overflow pipe from sand filtering beds. Note the solids around the pipe & discoloration in the pipe

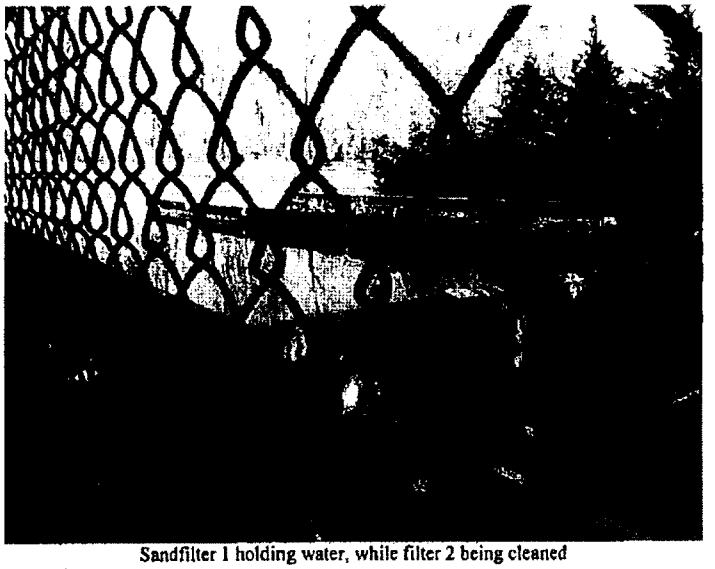

Sandfilter 1 holding water, while filter 2 being cleaned

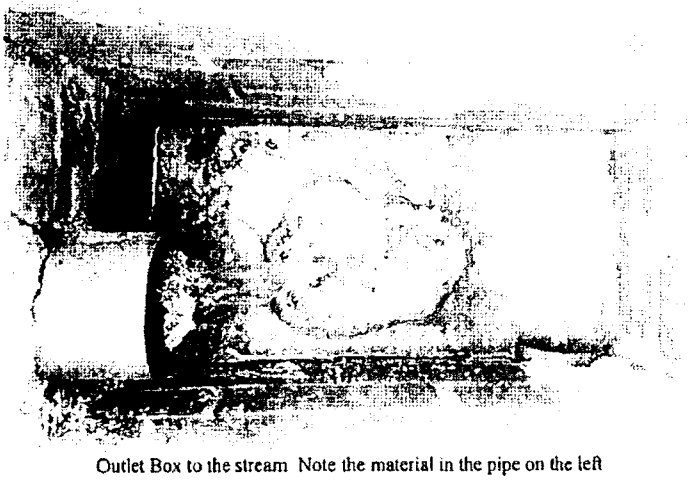

Outlet Box to the stream. Note the material in the pipe on the left

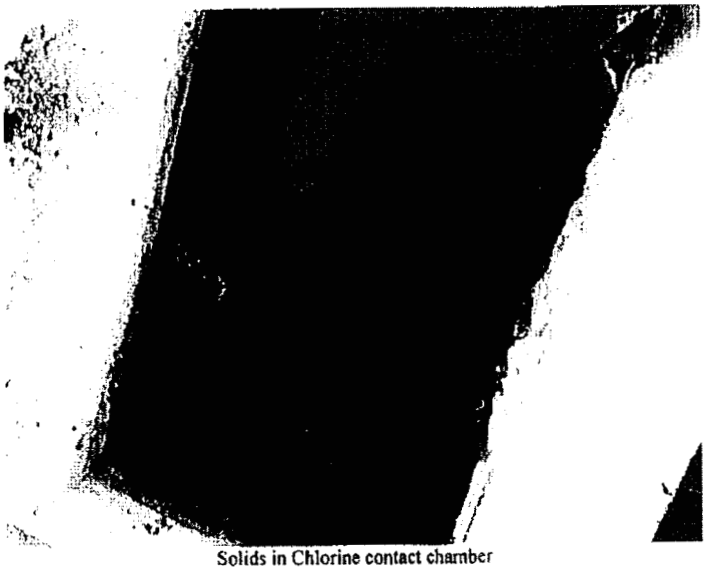

Solids in Chlorine contact chamber

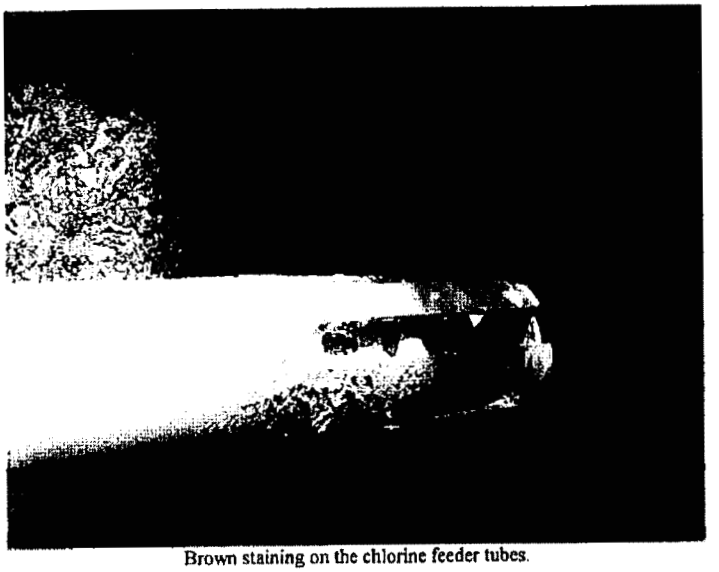

Brown staining on the chlorine feeder tubes.

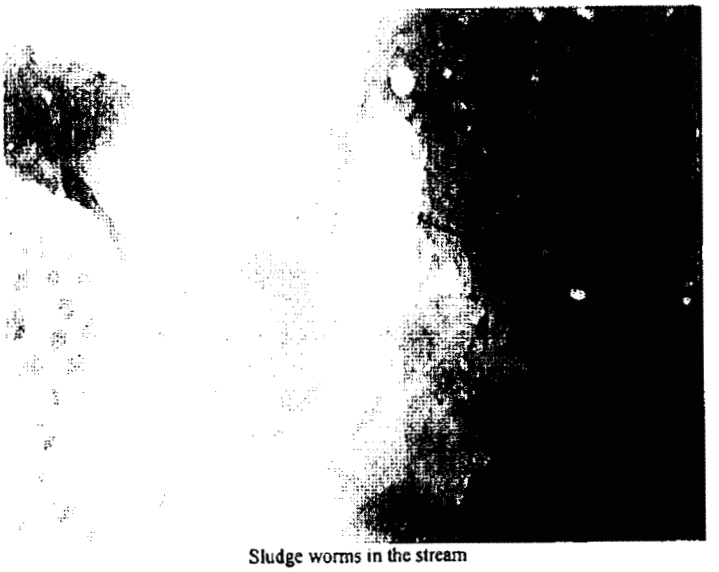

Sludge worms in the stream

Outlet 001 with suds and sludge worms

Solids in the stream as seen in the outlet box picture above.

Stream with solids and suds

STATE OF WEST VIRGINIA
Department of Environmental Protection
Environmental Enforcement

NOTICE OF VIOLATION

Violation No. **w16-19-037-mkk**

To the Operator or Agent of:

Facility Name: **Shenandoah Junction WWTP** Permit No. **WVG550533**

Permittee or Individual **SJPS Inc.**

Located at or near **Shenandoah Junction** in **Jefferson** County

Representative _____ Date **4/14/16** Time **9:30a**

Address / phone number **270 Industrial Blvd. Kearneysville, WV 25430**

Whereas, an inspection of the above named operation by the undersigned, duly authorized agent of the Secretary, at which the following described condition or practice exists, in violation of Chapter _____, Article _____, Section(s) _____ of the Code of West Virginia and/or Section(s) _____ of the Rules and Regulations and/or Section(s) **Appx A-II** of the Permit referenced above promulgated thereunder in that you:
failed to comply with your WV/NPDES Permit by not reporting a spill/Bypass

The following corrective measures were discussed with you at the time of this inspection:

Within **20** days provide a written response to the inspector named below, at the address indicated, detailing the actions taken to abate this violation.

Received by:

Sent certified mail to permittee

Signature | Title

Michael Kanehl

Duly Authorized Agent / Inspector | **304-822-7266** Telephone | **michael.k.kanehl@wv.gov** E-mail

Send Response to the Inspector at the address indicated below:
WV Department of Environmental Protection
Environmental Enforcement / WW
22288 Northwestern Pike, Romney, WV 26757

Certified Mail Tracking #: **7015 0640 0000 8935 4004**

STATE OF WEST VIRGINIA
Department of Environmental Protection
Environmental Enforcement

NOTICE OF VIOLATION

Violation No. **w16-19-038-mkk**

To the Operator or Agent of:

Facility Name: **Shenandoah Junction WWTP** Permit No. **WVG550533**

Permittee or Individual **SJPS Inc.**

Located at or near **Shenandoah Junction** in **Jefferson** County

Representative _____ Date **4/14/16** Time **9:30a**

Address / phone number **270 Industrial Blvd. Kearneysville, WV 25430**

Whereas, an inspection of the above named operation by the undersigned, duly authorized agent of the Secretary, at which the following described condition or practice exists, in violation of Chapter _____, Article _____, Section(s) _____ of the Code of West Virginia and/or Section(s) **47csr2-3** of the Rules and Regulations and/or Section(s) **Appx A-I** of the Permit referenced above promulgated thereunder in that you: **Violated the Legislative Rules Governing Water Quality "Causing Conditions Not Allowable in State Waters". Sludge worms and other solids was observed in the stream near outlet 001.**

The following corrective measures were discussed with you at the time of this inspection:
Clean the stream and prevent sludge from entering the stream.

Within --- days provide a written response to the inspector named below, at the address indicated, detailing the actions taken to abate this violation.

Received by:
Sent certified mail to permittee

Signature | Title

Michael Kanehl

Duly Authorized Agent / Inspector | **304-822-7266** Telephone | **michael.k.kanehl@wv.gov** E-mail

Send Response to the Inspector at the address indicated below:
WV Department of Environmental Protection
Environmental Enforcement / WW
22288 Northwestern Pike, Romney, WV 26757

Certified Mail Tracking #: **7015 0640 0000 8935 4004**

STATE OF WEST VIRGINIA
Department of Environmental Protection
Environmental Enforcement

NOTICE OF VIOLATION

Violation No. **w16-19-039-mkk**

To the Operator or Agent of:

Facility Name: **Shenandoah Junction WWTP** Permit No. **WVG550533**

Permittee or Individual **SJPS Inc.**

Located at or near **Shenandoah Junction** in **Jefferson** County

Representative _____ Date **4/14/16** Time **9:30a**

Address / phone number **270 Industrial Blvd. Kearneysville, WV 25430**

Whereas, an inspection of the above named operation by the undersigned, duly authorized agent of the Secretary, at which the following described condition or practice exists, in violation of Chapter _____, Article _____, Section(s) _____ of the Code of West Virginia and/or Section(s) _____ of the Rules and Regulations and/or Section(s) **Appx A** of the Permit referenced above promulgated thereunder in that you: **failed to comply with your WV/NPDES Permit by failing to properly operate and maintain the treatment plant by allowing sludge to discharge to the stream through outlet 001.**

The following corrective measures were discussed with you at the time of this inspection:

Within --- days provide a written response to the inspector named below, at the address indicated, detailing the actions taken to abate this violation.

Received by:

Sent certified mail to permittee

Signature | Title

Michael Kanehl

Duly Authorized Agent / Inspector | **304-822-7266** Telephone | **michael.k.kanehl@wv.gov** E-mail

Send Response to the Inspector at the address indicated below:
WV Department of Environmental Protection
Environmental Enforcement / WW
22288 Northwestern Pike, Romney, WV 26757

Certified Mail Tracking #: **7015 0640 0000 8935 4004**

Rev. 01/00; 09/03
State of West Virginia
Department of Environmental Protection
Environmental Enforcement

Time In 10:30aNo. _____
Time Out 11a
County Jefferson

Facility Inspection Report

Facility Name Shenandoah Junction WWTP Location Shenandoah Junction

Permit No. WVG550533 Exp. Date 09/30/20 Design Flow 0.018MGD

Permittee SHENANDOAH JUNCTION PUBLIC SEWER, INC. Present Flow N/D

Address 270 Industrial Blvd. Kearneysville, WV 25430 Weather Rain

☐ **Municipal Plant** ☐ **PSD** ☒ **Package Plant** ☐ **Ponds** ☐ **Other**

Evaluation codes: S - satisfactory; M-marginal; U-unsatisfactory; N/A-not applicable; N/O-not observed; N/D-not determined

01 Collection System	N/D	16 Pond-Stab.	N/A	31 Trickling Filter	N/A	46 Laboratory	N/D
02 Pump Stations	N/D	17 Pond -Polishing	N/A	32 Dosing Device	S	47 MSDS	N/D
03 Influent	S	18 Pond-Lagoon	N/A	33 Sludge Dewatering	N/D	48 Chemical Handling	N/D
04 Flow Meter	N/A	19 Aeration	S	34 Digester	S	49 HAZMAT	N/A
05 Trash Trap	N/A	20 Clarifier (s)	M	35 Sludge Disposal	S	50 Stormwater	N/A
06 Grease Trap	N/A	21 Scum Removal	N/D	36 Trash Disposal	N/D	51 Nonpoint	N/A
07 Bar Screen	S	22 Chemical Feeders	S	37 Ash Disposal	N/A	52 Shipping/Recvg	N/A
08 Comminutor	N/A	23 Filtration	S	38 Oil Disposal	N/D	53 Monitoring Wells	N/A
09 EQ Basin	N/A	24 Chlorination	S	39 General Housekeeping	S	54 MW Reports	N/A
10 Holding Tank (s)	N/A	25 Disinfection	N/D	40 Surface H2O Diversion	N/D	55 SPCC	N/A
11 Clarifier (s)	N/A	26 Contact Chamber	S	41 Dike Condition	N/A	56 BMP's	N/A
12 Separator (s)	N/A	27 Post Aeration	N/A	42 Fence	S	57 Process Controls	N/D
13 SSO/CSO/Bypass	N/A	28 Dechlorination	S	43 Records	S	58 MLSS	N/D
14 Grit Removal	N/A	29 UV	N/A	44 Discharge Limitations	U	59 Compliance Asst	N/A
15 I&I	N/D	30 SBR(s)	N/A	45 Auxiliary Power	N/A	60	

Discharge #	Flow	pH	C12res	DO	Odor	Marker	Appearance	Samples	Photos	Evaluation
001	**2gpm**	**N/D**	**pipe under water**	**N/D**	**S**	**S**	**S**	**N**	**N**	**N/D**

Receiving Stream / Basin Elk Run

Comments / Deficiencies:

20; Discolored water was entering weir from the clarifier to a settling tank before discharging onto sandfilter. Discharge from plant was clear. 44: DMR excusion for BOD for 9/16 reporting period.

****WARNING!** You are hereby notified that the following remedial measures must be taken on or before: Comply with your WV/NPDES Permit**

Official Representative: sent to permittee by certified mail Title_____ Inspector M. Kanehl Date 4-17-17

Number of NOV's issued on this date: 1 None: ☐

Copy distribution: Region; Facility; Charleston; Inspector

STATE OF WEST VIRGINIA
Department of Environmental Protection
Environmental Enforcement

NOTICE OF VIOLATION

Violation No. **w17-19-033-mkk**

To the Operator or Agent of:

Facility Name: **Shenandoah Junction WWTP** Permit No. **WVG550533**

Permittee or Individual **SHENANDOAH JUNCTION PUBLIC SEWER, INC.**

Located at or near **Shenandoah Junction** in **Jefferson** County

Representative _____ Date **4/17/17** Time **10:30a**

Address / phone number **270 Industrial Blvd. Kearneysville, WV 25430**

Whereas, an inspection of the above named operation by the undersigned, duly authorized agent of the Secretary, at which the following described condition or practice exists, in violation of Chapter _____, Article _____, Section(s) _____ of the Code of West Virginia and/or Section(s) _____ of the Rules and Regulations and/or Section(s) **A** of the Permit referenced above promulgated thereunder in that you:
had a DMR exceedence for BOD for the 9/16 sampling period.

The following corrective measures were discussed with you at the time of this inspection:

Within -- days provide a written response to the inspector named below, at the address indicated, detailing the actions taken to abate this violation.

Received by:

Sent certified mail to permittee

Signature | Title

Michael Kanehl

Duly Authorized Agent / Inspector | **304-822-7266** Telephone | **michael.k.kanehl@wv.gov** E-mail

Send Response to the Inspector at the address indicated below:
WV Department of Environmental Protection
Environmental Enforcement / WW
22288 Northwestern Pike, Romney, WV 26757

Certified Mail Tracking #: **7016 0750 0000 1608 9974**

RECEIVED SEP 1 1 2017

Rev. 01/00; 09/03
State of West Virginia
Department of Environmental Protection
Environmental Enforcement

Time In 10:00aNo. ____
Time Out 10:30a
County Jefferson

Facility Inspection Report

Facility Name Shenandoah Junction WWTP Location Shenandoah Junction

Permit No. WVG550533 Exp. Date 09/30/20 Design Flow 0.018MGD

Permittee SHENANDOAH JUNCTION PUBLIC SEWER, INC. Present Flow N/D

Address 270 Industrial Blvd. Kearneysville, WV 25430 Weather Rain

☐ **Municipal Plant** ☐ **PSD** ☒ **Package Plant** ☐ **Ponds** ☐ **Other**

Evaluation codes: S - satisfactory; M-marginal; U-unsatisfactory; N/A-not applicable; N/O-not observed; N/D-not determined

01 Collection System	N/D	16 Pond-Stab.	N/A	31 Trickling Filter	N/A	46 Laboratory	N/D
02 Pump Stations	N/D	17 Pond -Polishing	N/A	32 Dosing Device	S	47 MSDS	N/D
03 Influent	S	18 Pond-Lagoon	N/A	33 Sludge Dewatering	N/D	48 Chemical Handling	N/D
04 Flow Meter	N/A	19 Aeration	S	34 Digester	S	49 HAZMAT	N/A
05 Trash Trap	N/A	20 Clarifier (s)	S	35 Sludge Disposal	S	50 Stormwater	N/A
06 Grease Trap	N/A	21 Scum Removal	N/D	36 Trash Disposal	N/D	51 Nonpoint	N/A
07 Bar Screen	S	22 Chemical Feeders	S	37 Ash Disposal	N/A	52 Shipping/Recvg	N/A
08 Comminutor	N/A	23 Filtration	S	38 Oil Disposal	N/D	53 Monitoring Wells	N/A
09 EQ Basin	N/A	24 Chlorination	S	39 General Housekeeping	S	54 MW Reports	N/A
10 Holding Tank (s)	N/A	25 Disinfection	N/D	40 Surface H2O Diversion	N/D	55 SPCC	N/A
11 Clarifier (s)	N/A	26 Contact Chamber	S	41 Dike Condition	N/A	56 BMP's	N/A
12 Separator (s)	N/A	27 Post Aeration	N/A	42 Fence	S	57 Process Controls	N/D
13 SSO/CSO/Bypass	N/A	28 Dechlorination	S	43 Records	S	58 MLSS	N/D
14 Grit Removal	N/A	29 UV	N/A	44 Discharge Limitations	U	59 Compliance Asst	N/A
15 I&I	N/D	30 SBR(s)	N/A	45 Auxiliary Power	N/A	60	

Discharge #	Flow	pH	C12res	DO	Odor	Marker	Appearance	Samples	Photos	Evaluation
001	**N/D**	**N/D**	**pipe under water**	**N/D**	**S**	**S**	**N/D**	**N**	**N**	**N/D**

Receiving Stream / Basin Elk Run

Comments / Deficiencies:

Discharge from plant was clear. 44: DMR excursion for BOD, DO & failure to report ammonia for 3/17 reporting period. The outlet area was over grown with vegetation.

****WARNING!** You are hereby notified that the following remedial measures must be taken on or before: Comply with your WV/NPDES Permit**

Official Representative: sent to permittee by certified mail Title_____ Inspector M. Kanehl Date 8-2917

Number of NOV's issued on this date: 1 None: ☐

Copy distribution: Region; Facility; Charleston; Inspector

STATE OF WEST VIRGINIA
Department of Environmental Protection
Environmental Enforcement

NOTICE OF VIOLATION

Violation No. **w17-19-056-mkk**

To the Operator or Agent of:

Facility Name: **Shenandoah Junction WWTP** Permit No. **WVG550533**

Permittee or Individual **SHENANDOAH JUNCTION PUBLIC SEWER, INC.**

Located at or near **Shenandoah Junction** in **Jefferson** County

Representative _____ Date **8/29/17** Time **10:30a**

Address / phone number **270 Industrial Blvd. Kearneysville, WV 25430**

Whereas, an inspection of the above named operation by the undersigned, duly authorized agent of the Secretary, at which the following described condition or practice exists, in violation of Chapter _____, Article _____, Section(s) _____ of the Code of West Virginia and/or Section(s) _____ of the Rules and Regulations and/or Section(s) **A** of the Permit referenced above promulgated thereunder in that you:
had a DMR exceedence for BOD, DO & failure to report ammonia for 3/17 sampling period.

The following corrective measures were discussed with you at the time of this inspection:

Within -- days provide a written response to the inspector named below, at the address indicated, detailing the actions taken to abate this violation.

Received by:

Sent certified mail to permittee

Signature | Title

Michael Kanehl

Duly Authorized Agent / Inspector | **304-822-7266** Telephone | **michael.k.kanehl@wv.gov** E-mail

Send Response to the Inspector at the address indicated below:
WV Department of Environmental Protection
Environmental Enforcement / WW
22288 Northwestern Pike, Romney, WV 26757

Certified Mail Tracking #: **7017 0530 0000 6899 1802**

REQUEST NO. 5. Provide a copy of all treatment process flow diagrams, process and instrumentation diagrams, plant layout drawings, equipment specifications, construction specifications, and similar engineering documents which would provide Staff with the details of this wastewater treatment facility.

RESPONSE: See attached.

RESPONSE PREPARED BY, AND WHO COULD TESTIFY: Lee Snyder, President of Shenandoah Junction Public Sewer, Inc.

DATE RESPONSE PREPARED: November 14, 2017

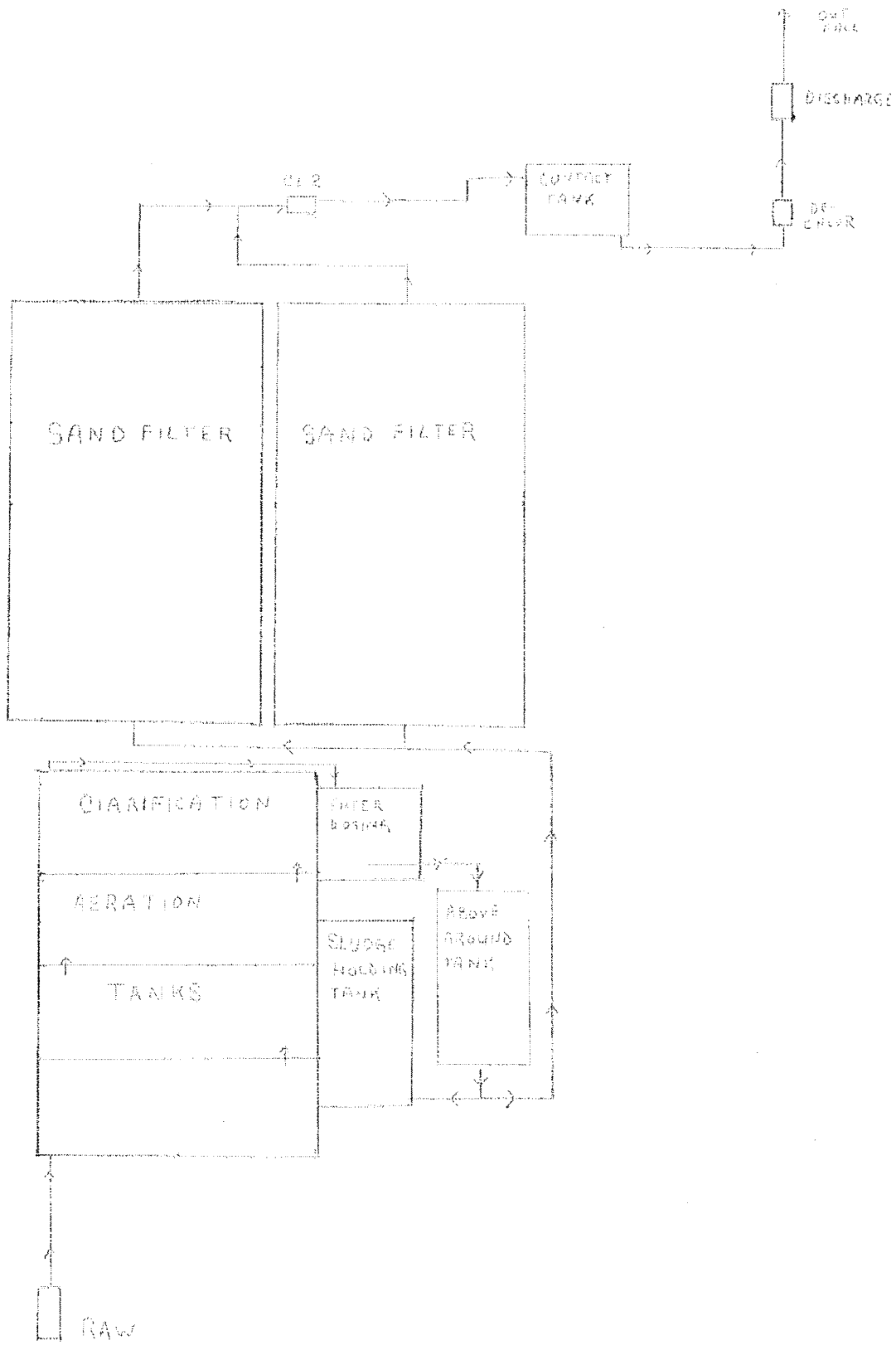
DISCHARGE
CL 2
CONTACT TANK
SAND FILTER
SAND FILTER
CLARIFICATION
AERATION
TANKS
SLUDGE HOLDING TANK
ABOVE GROUND TANKS
RAW

REQUEST NO. 6. Provide any correspondence, e-mails and other documents between the SJPS and the Jefferson County PSD (JCPSD) which deals with the subject of connecting flows from the SJPS system to the JCPS system.

RESPONSE: See attached e-mail communications between Lee Snyder and Sue Lawton, General Manager of the JCPSD.

As additional explanation, the consideration of connecting Shenandoah Junction to the JCPSD system actually started at the time of the construction of the JCPSD 6" force main through the southern edge of Shenandoah Junction. This force main was constructed to allow connection of both Jefferson High School and the Harpers Ferry Job Corp. Center to the District's existing force main along Route 115 (old Route 9). That line runs westward from a pump station at the Harpers Ferry Job Corp. to Jefferson High School. A pump station at the High School picks up the flow from both the High School and now the Wildwood Middle School. This station pumps sewage flows westward to Route 20. The 6" force main parallels Route 20 to the intersection of the Route 20 and Route 115. The line is shown on an exhibit map of the Shenandoah Junction area which is being submitted with these answers in Response to Request No. 7.

At the time of construction of the JCPSD force main, approximately 18 to 20 years ago, a tee and valve were installed in the line for the future connection of Shenandoah Junction flows to that force main. Even then, a connection for the Shenandoah Junction sewer was anticipated. This is also on the exhibit map of Shenandoah Junction including photos of the existing valve connection.

Obviously, many years have passed since the line was installed. One reason for the connection not occurring was due to the high cost of the JCPSD's service. The JCPSD tariff has always significantly exceeded the Shenandoah Junction tariff. The JCPSD tariff has no higher use blocks at a more economical cost. Also, the JCPSD has no bulk rate in its tariff. Accordingly, it has not been practical for Shenandoah Junction to even attempt to design a project to connect to the force main.

In 2016, this issue became much more pressing as a result of the imposition of more restrictive discharge limits and ensuing inspections made by the DEP. This resulted in Shenandoah Junction pursuing the JCPSD for a solution to the Shenandoah Junction dilemma.

RESPONSE PREPARED BY, AND WHO COULD TESTIFY: Lee Snyder, President of Shenandoah Junction Public Sewer, Inc.

DATE RESPONSE PREPARED: November 14, 2017

Lee Snyder

From: Lee Snyder
Sent: Tuesday, April 25, 2017 3:57 PM
To: Susanne Lawton
Cc: Stephanie Glascock; Zane Summerfield (zsummerfield@thrashereng.com); James Kelsh; Wayne D. Morgan (wmorgan@thrashereng.com); Ashley Stottlemyer; 'weese1935 @yahoo.com'; 'William Howard Strider'
Subject: RE: Potential for Sewer Service for Shenandoah Junction

Sure, I'll be glad to say that. I'm Going to need an official response from the district at some point. I'm not very confident that the situation will get any better if one of the hatters is appointed to your board. If you need me to come om Monday night I will.

Lee Snyder, President
Snyder Environmental Services, Inc.
270 Industrial Blvd.
Kearneysville, WV 25430
Phone: 304-725-9140
Fax: 304-728-7326
Email: lsnyder@snyderenv.com

CONFIDENTIALITY NOTICE:
This e-mail message, including all attachments, is for the sole use of the intended recipient(s) and may contain confidential and privileged information. If you are not the intended recipient, you may NOT use, disclose, copy or disseminate this information. Please contact the sender by reply e-mail immediately and destroy all copies of the original message including all attachments. Your cooperation is greatly appreciated.

From: Susanne Lawton [mailto:gm@jcpsd.com]
Sent: Tuesday, April 25, 2017 3:29 PM
To: Lee Snyder <LSnyder@snyderenv.com>
Cc: Stephanie Glascock <sglascock@juiwater.net>; Zane Summerfield (zsummerfield@thrashereng.com) <zsummerfield@thrashereng.com>; James Kelsh <jkelsh@bowlesrice.com>; Wayne D. Morgan (wmorgan@thrashereng.com) <wmorgan@thrashereng.com>; Ashley Stottlemyer <admasst@jcpsd.com>; 'weese1935@yahoo.com' <weese1935@yahoo.com>; 'William Howard Strider' <whstrider@gmail.com>
Subject: RE: Potential for Sewer Service for Shenandoah Junction

Lee, can you tell DEP that when our project goes through, we will have enough capacity? At that time it would be a lot easier for us to accept your flows.

From: Susanne Lawton
Sent: Tuesday, April 25, 2017 3:17 PM
To: 'Lee Snyder' <LSnyder@snyderenv.com>
Cc: Stephanie Glascock <sglascock@juiwater.net>; Zane Summerfield (zsummerfield@thrashereng.com) <zsummerfield@thrashereng.com>; James Kelsh <jkelsh@bowlesrice.com>; Wayne D. Morgan (wmorgan@thrashereng.com) <wmorgan@thrashereng.com>; Ashley Stottlemyer <admasst@jcpsd.com>
Subject: RE: Potential for Sewer Service for Shenandoah Junction

Lee, Zane quickly looked at the system and it appears we will max out our system if we take on Shenandoah Junction. I have asked him to look at how much it would cost in District system upgrades to allow your flows. If it is more than

reasonable, we may not want to have this on the agenda or I will have to share your e-mail or have you here in person to discuss the problem. This would mean that the haters would be all over you saying you are polluting and everything else nasty. If it is not a reasonable amount to do necessary upgrades to the District's system, let's not even have it on the agenda unless you feel it is important even though it will bring wrath upon you.
Sue

From: Lee Snyder [mailto:LSnyder@snyderenv.com]
Sent: Tuesday, April 25, 2017 1:54 PM
To: Susanne Lawton <gm@jcpsd.com>
Cc: Stephanie Glascock <sglascock@juiwater.net>
Subject: Potential for Sewer Service for Shenandoah Junction

Sue:

I am writing to follow up on our phone conversation of today. As we have discussed over the years, I am still trying to determine the best long-term sewer service solution for the community of Shenandoah Junction. The treatment plant is operated by Shenandoah Junction Public Sewer Inc, whose stock is owned by me. The corporation is a PSC regulated utility and has a present customer count is 163 customers. The sewer flow as reflected by water meter readings for the previous 4 monthly billing are:

January 2017	531,230 gallons
February 2017	643,000 gallons
March 2017	483,980 gallons
April 2017	507,680 gallons

The WV DEP recently reduced the permit limits for BOD and ammonia nitrogen for the plant. The new limits are difficult to meet with the current plant facility.

DEP has required that we provide a plan for how we will meet these more restrictive effluent limits. Accordingly, I believe we have two options:

1. Design and construct a substantial upgrade to the treatment plant.
2. Design and construct a pumps station to deliver the Shenandoah Junction flow to the JCPSD's force main at Route 20 and the Norfolk Southern Railroad.

Of course, the first question, with regard to option 2, is can the District accept the Shenandoah Junction flow at the location suggested? Please direct this question to your Board.

If the District can accept the flow, the next question will be one of cost. The current rate in Shenandoah Junction is $9.39 per thousand gallons. I understand that the District does not have a bulk rate in their tariff. However, cost will be a consideration, especially since the PSC will have to approve what solution we decide upon pursuing.

Please present this request to your Board in order that we can thoroughly analyze the options for Shenandoah Junction Public Sewer.

Lee Snyder, President
Snyder Environmental Services, Inc
270 Industrial Blvd
Kearneysville, WV 25430
304-725-9140
Fax- 304-728-7326

Lee Snyder

From: Susanne Lawton <gm@jcpsd.com>
Sent: Friday, June 09, 2017 11:47 AM
To: Lee Snyder; Stephanie Glascock
Subject: FW: Charles Town City Council meeting, February 21st

Lee and Stephanie:
Here is the video from the Charles Town City Council meeting where their bond attorney, John Stump, talks about controlling growth by withholding sewer service. I believe the developers may want to see this.
Thanks, Sue

PS Lee, I was wrong, the date of this meeting was February 21st. *Time flies!!!*

From: Susanne Lawton [mailto:susannelawton@yahoo.com]
Sent: Saturday, April 29, 2017 3:57 PM
To: April Shultz <financemanager@jcpsd.com>; Ashley Stottlemyer <admasst@jcpsd.com>; Amanda Grove Roberson <amandagrove85@yahoo.com>; Trish Fowler <trishasfowler@comcast.net>
Subject: Fw: Charles Town City Council meeting, February 21st

This video is proof that Charles Town controlled growth with the "lack" of sewer service about 10 years ago. Read the e-mail i sent to Patsy and listen to the video.
Sue

On Saturday, April 29, 2017 3:16 PM, Susanne Lawton <susannelawton@yahoo.com> wrote:

Good Saturday Afternoon:
Josh Compton has said that the Charles Town Utility board is obligated to provide sewer service, so there is no concern about them using sewer to control growth. Listen carefully to minute 17:00 on for a few minutes to John Stump, Bond Counsel for Charles Town. He stated that Charles Town effectively controled growth about 10 years ago with sewer! I remember that time and we had a 22 month moratorium waiting for Charles Town to upgrade the wastewater treatment plant. Then Ann Pannaceta?? (sorry, I can't remember how to spell her name), a Charles Town City Counsel Member says, very quietly, "that is a policy decision". I am shocked that they feel this is a policy decision and fear that when members change, the policy may again change to limit growth in the County. This video is the 2nd video of February 21st for the City Council; the one at 7:00. The 6:00 video is all John Stump talking about how different consolidation structures would work. He does not look at anything inventive, such as the regional utilities in VA. I've given you a link to the second video where John states that they have in the past, and could do so in the future, control growth with sewer. Patsy, I suggest you share this video telling people to listen to minute 17:00
Thanks, Sue
: Video Outline - Charles Town, West Virginia

Video Outline - Charles Town, West Virginia

REQUEST NO. 7. Provide a map showing the general location of the SJPS sewer system, the SJPS treatment plant and any associated sewage facilities owned and/or operated by SJPS. Indicate on this map the location of the force main operated by the JCPSD (as referenced in the "Petition" at page 2, paragraph 3) and also show the proposed or potential location for the connection with the JCPSD force main.

RESPONSE: See attached map and photographs. The Future Main Pump Station for the entire town will be located between Elk Street and Seventh Street. All of the flow from the Town should be gravity to this point and then pumped back along First Street to the existing valve and tee on the JCPSD force main at the corner of First Street and County Rt. 20. This will join the flows from Job Corps, Jefferson High School and Wildwoods Middle School with the flow from Shenandoah Junction to be delivered to Charles Town for treatment.

RESPONSE PREPARED BY, AND WHO COULD TESTIFY: Lee Snyder, President of Shenandoah Junction Public Sewer, Inc.

DATE RESPONSE PREPARED: November 14, 2017

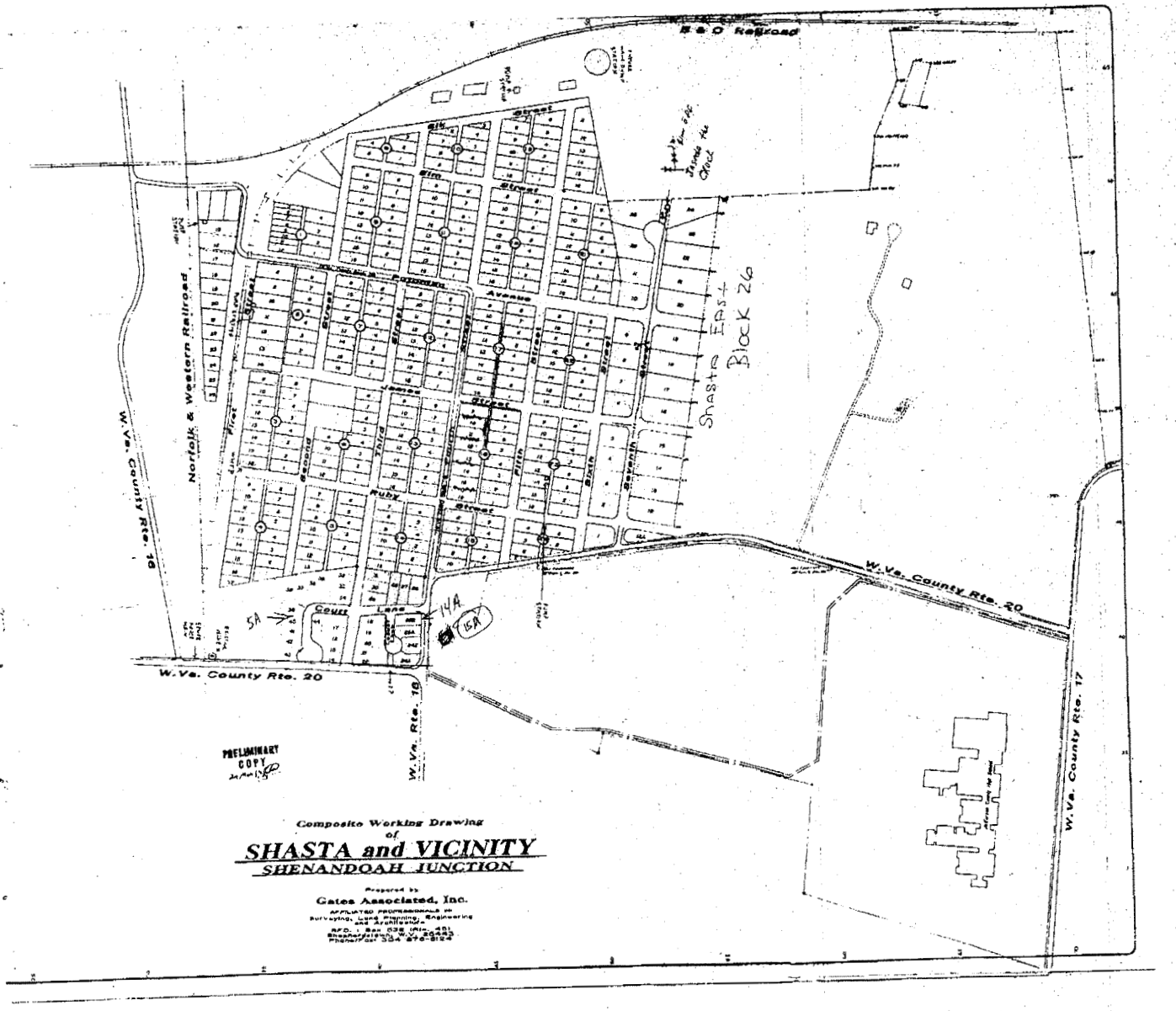
B & O Railroad
Norfolk & Western Railroad
W. Va. County Rte. 18
W. Va. County Rte. 20
W. Va. Rte. 19
W. Va. County Rte. 17
Shasta East Block 26
Ruby
Court
Lane
Avenue
Street
PRELIMINARY COPY
Composite Working Drawing of
SHASTA and VICINITY
SHENANDOAH JUNCTION
Prepared by
Gates Associated, Inc.

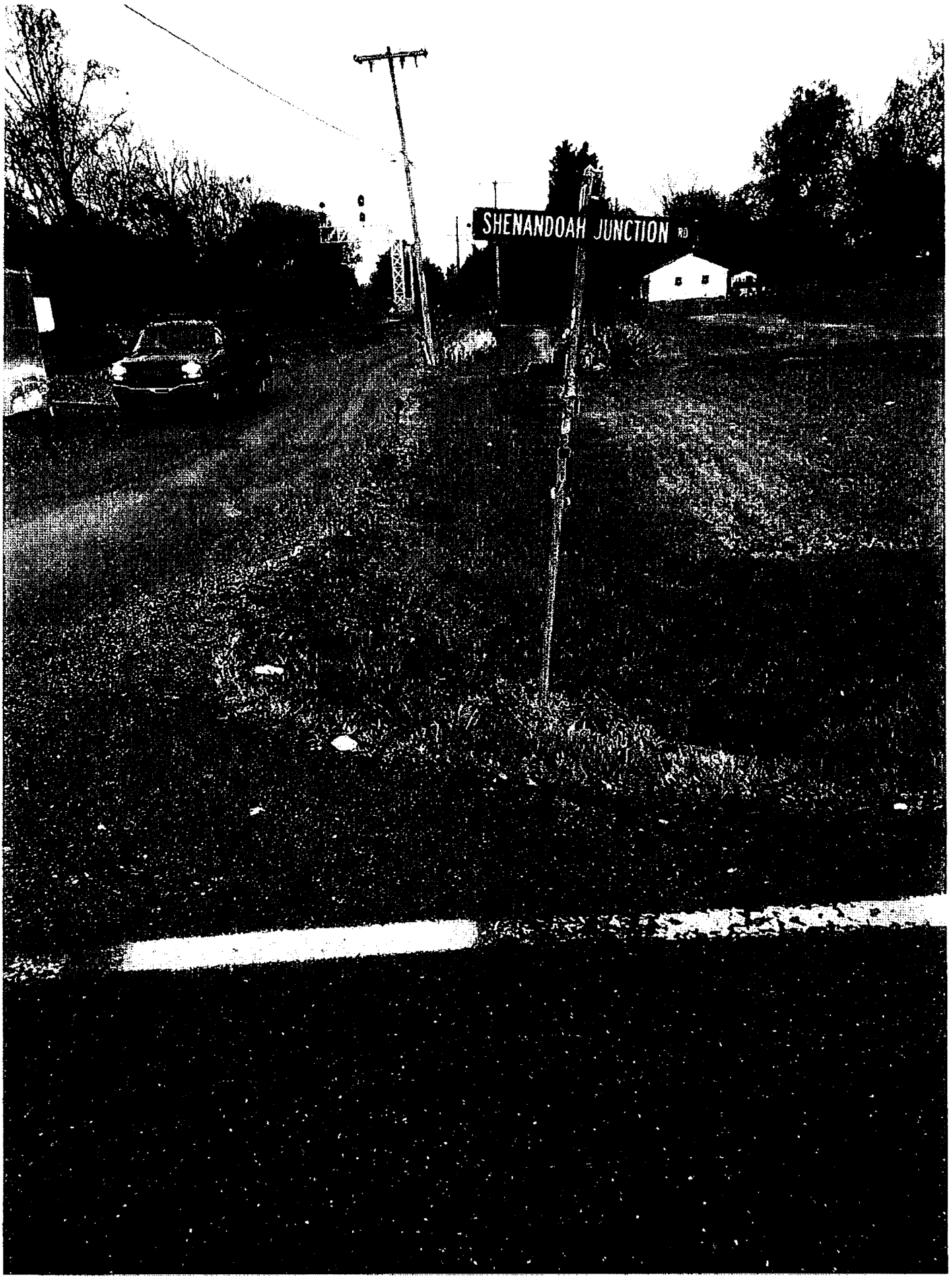
SHENANDOAH JUNCTION RD

REQUEST NO. 8. Provide the current number of customers connected to this system and a table showing the volume of sewage service billed, by month and year, for the period of January 1, 2016 through the most current billing cycle.

RESPONSE: See attached.

RESPONSE PREPARED BY, AND WHO COULD TESTIFY: Lee Snyder, President of Shenandoah Junction Public Sewer, Inc.

DATE RESPONSE PREPARED: November 14, 2017

8. **Provide the current number of customers connected to this system and a Table showing the volume of Sewage service billed, by month and year, for the period of January 1, 2016 through the most current billing cycle.**

Shenandoah Junction Sewer Billings

Month & Year	Sewer Customer Count	Total Charged	Billed Usage	Monthly Average	Exceeded Monthly Permit Flow
Jan-16	164	5763.22	549,600	18,320	X
Feb-16	163	6065.92	594,100	19,803	X
Mar-16	163	6895.63	694,100	23,137	X
Apr-16	162	4894.97	426,710	14,224	
May-16	164	5892.32	561,160	18,705	X
Jun-16	163	6160.01	602,320	20,077	X
Jul-16	163	6643.19	633,070	21,102	X
Aug-16	162	6307.63	610,700	20,357	X
Sep-16	163	5954.65	559,840	18,661	X
Oct-16	165	5956.17	559,210	18,640	X
Nov-16	164	6170.31	586,270	19,542	X
Dec-16	166	5729.32	536,130	17,871	
Jan-17	162	5694.11	531,230	17,708	
Feb-17	164	6589.59	643,000	21,433	X
Mar-17	163	5375.79	483,980	16,133	
Apr-17	162	5480.09	507,680	16,923	
May-17	162	6262.4	612,280	20,409	X
Jun-17	167	5733.64	535,270	17,842	
Jul-17	158	6150.13	607,150	20,238	X
Aug-17	162	6958.21	692,570	23,086	X
Sep-17	162	6531.13	626,380	20,879	X
Oct-17	166	6386.33	616,550	20,552	X

REQUEST NO. 9. Provide any information in your possession which would document possible future growth in the number of customers which may readily connect to this system and which lie within the service area of the existing collection system. (This would include potential growth from vacant, platted lots adjacent to existing mains but, would not include future growth which would require an extension of the collection system.)

RESPONSE: Roughly 97 existing water customers could become sewer customers with the addition of the Main Pump Station and accompanying mains. Also, there are approximately 20 lots that exist but do not contain residential housing. There is also the potential for development of the surrounding 30 acres if the land went into the housing development market.

RESPONSE PREPARED BY, AND WHO COULD TESTIFY: Lee Snyder, President of Shenandoah Junction Public Sewer, Inc.

DATE RESPONSE PREPARED: November 14, 2017

CERTIFICATE OF SERVICE

I, David B. Hanna, counsel for Shenandoah Junction Public Sewer, Inc., hereby certify that copies of the foregoing has been served upon the following, by hand delivery, this 15th day of November 2017:

VIA HAND DELIVERY
Ronald Robertson, Jr., Esq.
Legal Division
Public Service Commission
201 Brooks Street
Charleston, WV 25301

Ingrid Ferrell
Executive Secretary
Public Service Commission
201 Brooks Street
Charleston, WV 25301

DAVID B. HANNA

MEMORANDUM

Re: Discuss retaining an engineer for a capacity analysis

To: Jefferson County PSD Board Members & Professionals

Date: September 6, 2018

Preparers: April Shultz, General Manager

Background:
Treasurer, Todd Milliron requested this agenda item.

At the October 7, 2013 meeting, the Board hired Dunn Engineers for general engineering services. The current contract is included behind this memo.

Action:
The Board may want to take action on directing Dunn Engineering to conduct a capacity analysis.

SHORT FORM OF AGREEMENT

BETWEEN
JEFFERSON COUNTY PUBLIC SERVICE DISTRICT
and
DUNN ENGINEERS, INC.
for
GENERAL CONSULTING SERVICES

Prepared by

EJCDC

ENGINEERS JOINT CONTRACT DOCUMENTS COMMITTEE

and

Issued and Published Jointly by

ACEC
AMERICAN COUNCIL OF ENGINEERING COMPANIES

AGC of America
THE ASSOCIATED GENERAL CONTRACTORS OF AMERICA
Quality People. Quality Projects.

ASCE American Society of Civil Engineers

National Society of Professional Engineers
Professional Engineers in Private Practice

AMERICAN COUNCIL OF ENGINEERING COMPANIES

ASSOCIATED GENERAL CONTRACTORS OF AMERICA

AMERICAN SOCIETY OF CIVIL ENGINEERS

PROFESSIONAL ENGINEERS IN PRIVATE PRACTICE
A Practice Division of the
NATIONAL SOCIETY OF PROFESSIONAL ENGINEERS

Copyright ©2009 National Society of Professional Engineers for EJCDC. All rights reserved.

Copyright © 2009 National Society of Professional Engineers
1420 King Street, Alexandria, VA 22314-2794
(703) 684-2882
www.nspe.org

American Council of Engineering Companies
1015 15th Street N.W., Washington, DC 20005
(202) 347-7474
www.acec.org

American Society of Civil Engineers
1801 Alexander Bell Drive, Reston, VA 20191-4400
(800) 548-2723
www.asce.org

Associated General Contractors of America
2300 Wilson Boulevard, Suite 400, Arlington, VA 22201-3308
(703) 548-3118
www.agc.org

The copyright for this EJCDC document is owned jointly by the four EJCDC sponsoring organizations and held in trust for their benefit by NSPE.

Copyright ©2009 National Society of Professional Engineers for EJCDC. All rights reserved.

SHORT FORM OF AGREEMENT BETWEEN OWNER AND ENGINEER FOR PROFESSIONAL SERVICES

THIS IS AN AGREEMENT effective as of 10-7-2013 ("Effective Date") between

Jefferson County Public Service District ("Owner") and Dunn Engineers, Inc. ("Engineer").

Owner's Project, of which Engineer's services under this Agreement are a part, is generally identified as follows:

Providing professional engineering and consulting services to the OWNER for the following activities: ("Project").

- Surveying and GPS services
- Analyzing and assisting with resolution of operation and maintenance issues
- Structural, Electrical and Sewer and Water design and review
- Specification writing
- Easement acquisition assistance
- Preparing construction contracts, and soliciting and evaluating bids and proposals
- Assisting with developer plan reviews
- Providing construction administration services
- Preparing permit applications and renewals
- Preparing cost estimates
- Analyzing utility systems' components, capabilities and deficiencies
- Assisting with PSC cases and complaints
- Assisting with resolution of customer complaints
- Assisting with intra-utility issue resolution and negotiation
- Responding to regulatory agency inquiries and assisting with regulatory compliance
- Preparing funding applications and supporting reports and documentation
- Providing any other technical assistance advice and services required by the OWNER

These activities will generally be provided on an "as-needed" basis, as directed by the OWNER.

Copyright ©2009 National Society of Professional Engineers for EJCDC. All rights reserved.

Engineer's Services under this Agreement are generally identified as follows:

Owner and Engineer further agree as follows:

General consulting services. Specific services, projects or work directives (and compensation for the same) shall be detailed, in writing, before the services are rendered.

1.01 *Basic Agreement and Period of Service*

A. Engineer shall provide, or cause to be provided, the services set forth in this Agreement. If authorized by Owner, or if required because of changes in the Project, Engineer shall furnish services in addition to those set forth above. Owner shall pay Engineer for its services as set forth in Paragraphs 7.01 and 7.02. Terms shall be for a period of five (5) years from date of execution with an option to extend.

B. Engineer shall complete its services within a reasonable time.

C. If the Project includes construction-related professional services, then Engineer's time for completion of services is conditioned on the time for Owner and its contractors to complete construction not exceeding * months. If the actual time to complete construction exceeds the number of months indicated, then Engineer's period of service and its total compensation shall be appropriately adjusted.

* to be stipulated prior to initiation of services.

2.01 *Payment Procedures*

A. *Invoices*: Engineer shall prepare invoices in accordance with its standard invoicing practices and submit the invoices to Owner on a monthly basis. Invoices are due and payable within 45 days of receipt. If Owner fails to make any payment due Engineer for services and expenses within 45 days after receipt of Engineer's invoice, then the amounts due Engineer will be increased at the rate of 1.0% per month (or the maximum rate of interest permitted by law, if less) from said forty-fifth day. In addition, Engineer may, after giving seven days written notice to Owner, suspend services under this Agreement until Engineer has been paid in full all amounts due for services, expenses, and other related charges. Owner waives any and all claims against Engineer for any such suspension. Payments will be credited first to interest and then to principal.

3.01 *Termination*

A. The obligation to continue performance under this Agreement may be terminated:

1. For cause:

a. By either party upon 30 days written notice in the event of substantial failure by the other party to perform in accordance with the Agreement's terms through no fault of

Copyright ©2009 National Society of Professional Engineers for EJCDC. All rights reserved.

the terminating party. Failure to pay Engineer for its services is a substantial failure to perform and a basis for termination.

b. By Engineer:

1) upon seven days written notice if Owner demands that Engineer furnish or perform services contrary to Engineer's responsibilities as a licensed professional; or

2) upon seven days written notice if the Engineer's services for the Project are delayed for more than 90 days for reasons beyond Engineer's control.

Engineer shall have no liability to Owner on account of a termination by Engineer under Paragraph 3.01.A.1.b.

c. Notwithstanding the foregoing, this Agreement will not terminate as a result of a substantial failure under Paragraph 3.01.A.1.a if the party receiving such notice begins, within seven days of receipt of such notice, to correct its substantial failure to perform and proceeds diligently to cure such failure within no more than 30 days of receipt of notice; provided, however, that if and to the extent such substantial failure cannot be reasonably cured within such 30 day period, and if such party has diligently attempted to cure the same and thereafter continues diligently to cure the same, then the cure period provided for herein shall extend up to, but in no case more than, 60 days after the date of receipt of the notice.

2. For convenience:

a. By Owner effective upon Engineer's receipt of written notice from Owner.

b. By Engineer effective upon Owner's receipt of written notice of the Engineer.

B. The terminating party under Paragraph 3.01.A may set the effective date of termination at a time up to 30 days later than otherwise provided to allow Engineer to complete tasks whose value would otherwise be lost, to prepare notes as to the status of completed and uncompleted tasks, and to assemble Project materials in orderly files.

C. In the event of any termination under Paragraph 3.01, Engineer will be entitled to invoice Owner and to receive full payment for all services performed or furnished in accordance with this Agreement and all reimbursable expenses incurred through the effective date of termination.

4.01 *Successors, Assigns, and Beneficiaries*

A. Owner and Engineer are hereby bound and the successors, executors, administrators, and legal representatives of Owner and Engineer (and to the extent permitted by Paragraph 4.01.B the assigns of Owner and Engineer) are hereby bound to the other party to this Agreement and to the successors, executors, administrators, and legal representatives (and said assigns) of such other party, in respect of all covenants, agreements, and obligations of this Agreement.

Copyright ©2009 National Society of Professional Engineers for EJCDC. All rights reserved.

B. Neither Owner nor Engineer may assign, sublet, or transfer any rights under or interest (including, but without limitation, moneys that are due or may become due) in this Agreement without the written consent of the other, except to the extent that any assignment, subletting, or transfer is mandated or restricted by law. Unless specifically stated to the contrary in any written consent to an assignment, no assignment will release or discharge the assignor from any duty or responsibility under this Agreement.

C. Unless expressly provided otherwise, nothing in this Agreement shall be construed to create, impose, or give rise to any duty owed by Owner or Engineer to any contractor, subcontractor, supplier, other individual or entity, or to any surety for or employee of any of them. All duties and responsibilities undertaken pursuant to this Agreement will be for the sole and exclusive benefit of Owner and Engineer and not for the benefit of any other party.

5.01 *General Considerations*

A. The standard of care for all professional engineering and related services performed or furnished by Engineer under this Agreement will be the care and skill ordinarily used by members of the subject profession practicing under similar circumstances at the same time and in the same locality. Engineer makes no warranties, express or implied, under this Agreement or otherwise, in connection with Engineer's services. Subject to the foregoing standard of care, Engineer and its consultants may use or rely upon design elements and information ordinarily or customarily furnished by others, including, but not limited to, specialty contractors, manufacturers, suppliers, and the publishers of technical standards.

B. Engineer shall not at any time supervise, direct, control, or have authority over any contractor's work, nor shall Engineer have authority over or be responsible for the means, methods, techniques, sequences, or procedures of construction selected or used by any contractor, or the safety precautions and programs incident thereto, for security or safety at the Project site, nor for any failure of a contractor to comply with laws and regulations applicable to such contractor's furnishing and performing of its work.

C. This Agreement is to be governed by the law of the state or jurisdiction in which the Project is located.

D. Engineer neither guarantees the performance of any contractor nor assumes responsibility for any contractor's failure to furnish and perform its work in accordance with the contract between Owner and such contractor. Engineer is not responsible for variations between actual construction bids or costs and Engineer's opinions or estimates regarding construction costs.

E. Engineer shall not be responsible for the acts or omissions of any contractor, subcontractor, developer or supplier, or of any of their agents or employees or of any other persons (except Engineer's own employees) at the Project site or otherwise furnishing or performing any construction work; or for any decision made regarding the construction contract requirements, or any application, interpretation, or clarification of the construction contract other than those made by Engineer. Engineer will notify Owner of significant discrepancies between design documents and completed construction observed during construction, or discovered during investigation (applies to construction activities not observed by Engineer).

Copyright ©2009 National Society of Professional Engineers for EJCDC. All rights reserved.

F. The general conditions for any construction contract documents prepared hereunder are to be the "Standard General Conditions of the Construction Contract" as prepared by the Engineers Joint Contract Documents Committee (EJCDC C-700, 2007 Edition) unless the parties agree otherwise.

G. All documents prepared or furnished by Engineer are instruments of service, and Engineer retains an ownership and property interest (including the copyright and the right of reuse) in such documents, whether or not the Project is completed. Owner shall have a limited license to use the documents on the Project, extensions of the Project, and for related uses of the Owner, subject to receipt by Engineer of full payment for all services relating to preparation of the documents and subject to the following limitations: (1) Owner acknowledges that such documents are not intended or represented to be suitable for use on the Project unless completed by Engineer, or for use or reuse by Owner or others on extensions of the Project, on any other project, or for any other use or purpose, without written verification or adaptation by Engineer; (2) any such use or reuse, or any modification of the documents, without written verification, completion, or adaptation by Engineer, as appropriate for the specific purpose intended, will be at Owner's sole risk and without liability or legal exposure to Engineer or to its officers, directors, members, partners, agents, employees, and consultants; (3) Owner shall indemnify and hold harmless Engineer and its officers, directors, members, partners, agents, employees, and consultants from all claims, damages, losses, and expenses, including attorneys' fees, arising out of or resulting from any use, reuse, or modification of the documents without written verification, completion, or adaptation by Engineer; and (4) such limited license to Owner shall not create any rights in third parties.

H. To the fullest extent permitted by law, Owner and Engineer (1) waive against each other, and the other's employees, officers, directors, agents, insurers, partners, and consultants, any and all claims for or entitlement to special, incidental, indirect, or consequential damages arising out of, resulting from, or in any way related to the Project, and (2) agree that Engineer's total liability to Owner under this Agreement shall be limited to $500,000 or the total amount of compensation received by Engineer, whichever is greater.

I. The parties acknowledge that Engineer's scope of services does not include any services related to a Hazardous Environmental Condition (the presence of asbestos, PCBs, petroleum, hazardous substances or waste as defined by the Comprehensive Environmental Response, Compensation and Liability Act, 42 U.S.C. §§9601 et seq., or radioactive materials). If Engineer or any other party encounters a Hazardous Environmental Condition, Engineer may, at its option and without liability for consequential or any other damages, suspend performance of services on the portion of the Project affected thereby until Owner: (1) retains appropriate specialist consultants or contractors to identify and, as appropriate, abate, remediate, or remove the Hazardous Environmental Condition; and (2) warrants that the Site is in full compliance with applicable Laws and Regulations. * "Hazardous Environmental Condition" shall not include the presence of normal domestic sewage.

J. Owner and Engineer agree to negotiate each dispute between them in good faith during the 30 days after notice of dispute. If negotiations are unsuccessful in resolving the dispute, then the dispute shall be mediated. If mediation is unsuccessful, then the parties may exercise their rights at law. Notice, if required, shall be in writing and delivered to the appropriate address.

Copyright ©2009 National Society of Professional Engineers for EJCDC. All rights reserved.

6.01 *Total Agreement*

A. This Agreement (including any expressly incorporated attachments), constitutes the entire agreement between Owner and Engineer and supersedes all prior written or oral understandings. This Agreement may only be amended, supplemented, modified, or canceled by a duly executed written instrument.

7.01 *Basis of Payment*

A. Using the procedures set forth in Paragraph 2.01, Owner shall pay Engineer as follows:

1 Standard Hourly Rates (as shown in Appendix 1)

2. Lump Sum for specifically negotiated scopes of work (these services will be identified and priced through amendments to the agreement).

B. The portion of the compensation amount billed monthly for Engineer's services will be based upon Engineer's portion of the project actually completed during the billing period.

7.02 *Additional Services:* For additional services of Engineer's employees engaged directly on the Project, Owner shall pay Engineer an amount equal to the cumulative hours charged to the Project by each class of Engineer's employees times standard hourly rates for each applicable billing class; plus reimbursable expenses and Engineer's consultants' charges, if any. Engineer's standard hourly rates are attached as Appendix 1.

Attachments: Appendix 1, Engineer's Standard Hourly Rates

Copyright ©2009 National Society of Professional Engineers for EJCDC. All rights reserved.

This is **EXHIBIT E**, consisting of 2 pages, referred to in and part of the **Agreement between Owner and Engineer for Professional Services** dated _____, _____.

NOTICE OF ACCEPTABILITY OF WORK

PROJECT:

OWNER:

CONTRACTOR:

OWNER'S CONSTRUCTION CONTRACT IDENTIFICATION:

EFFECTIVE DATE OF THE CONSTRUCTION CONTRACT:

ENGINEER:

NOTICE DATE:

To: _____
Owner

And To: _____
Contractor

From: _____
Engineer

The Engineer hereby gives notice to the above Owner and Contractor that the completed Work furnished and performed by Contractor under the above Contract is acceptable, expressly subject to the provisions of the related Contract Documents, the Agreement between Owner and Engineer for Professional Services dated _____, _____, and the terms and conditions set forth in this Notice.

By: _____

Title: _____

Dated: _____

CONDITIONS OF NOTICE OF ACCEPTABILITY OF WORK

The Notice of Acceptability of Work ("Notice") is expressly made subject to the following terms and conditions to which all those who receive said Notice and rely thereon agree:

1. This Notice is given with the skill and care ordinarily used by members of the engineering profession practicing under similar conditions at the same time and in the same locality.

2. This Notice reflects and is an expression of the professional judgment of Engineer.

3. This Notice is given as to the best of Engineer's knowledge, information, and belief as of the Notice Date.

4. This Notice is based entirely on and expressly limited by the scope of services Engineer has been employed by Owner to perform or furnish during construction of the Project (including observation of the Contractor's work) under Engineer's Agreement with Owner and under the Construction Contract referred to in this Notice, and applies only to facts that are within Engineer's knowledge or could reasonably have been ascertained by Engineer as a result of carrying out the responsibilities specifically assigned to Engineer under such Agreement and Construction Contract.

5. This Notice is not a guarantee or warranty of Contractor's performance under the Construction Contract referred to in this Notice, nor an assumption of responsibility for any failure of Contractor to furnish and perform the Work thereunder in accordance with the Contract Documents.

IN WITNESS WHEREOF, the parties hereto have executed this Agreement, the Effective Date of which is indicated on page 1.

OWNER:

By: _____

Title: Secretary

Date Signed: Oct 7 2013

ENGINEER:

By: _____

Title: ~~President~~ (VP)

Date Signed: 7 October 2013

Engineer License or Firm's Certificate Number: WV10949

State of: West Virginia

Address for giving notices:

Jefferson County Public Service District

340 Edmond Road, Suite A

Kearneysville, WV 25430

Phone (304) 725-4647

Fax (304) 725-5976

E-mail: gm@jcpsd.com

Address for giving notices:

Dunn Engineers, Inc.

400 South Ruffner Road

Charleston, WV 25314

Phone (304) 342-3436

Fax (304) 342-7823

E-mail: dunneng@aol.com

Copyright ©2009 National Society of Professional Engineers for EJCDC. All rights reserved.

EJCDC

ENGINEERS JOINT CONTRACT DOCUMENTS COMMITTEE

This is **Appendix 1, Engineer's Standard Hourly Rates,** referred to in and part of the Short Form of Agreement between Owner and Engineer for Professional Services dated Oct 7, 2013.

Engineer's Standard Hourly Rates

A. *Standard Hourly Rates:*

1. Standard Hourly Rates are set forth in this Appendix 1 and include salaries and wages paid to personnel in each billing class plus the cost of customary and statutory benefits, general and administrative overhead, non-project operating costs, and operating margin or profit.

2. The Standard Hourly Rates apply only as specified in Paragraphs 7.01 and 7.02, and are subject to annual review and adjustment.

B. *Schedule of Hourly Rates:*

Hourly rates for services performed on or after the Effective Date are:

Billing Class V - Chief Project Representative	70.00/hour
Billing Class IV - Project Representative	65.00/hour
Billing Class III - Technician	65.00/hour
Billing Class II - Project Engineer / EI	95.00/hour
Billing Class I - Project Manager	125.00/hour
Principal	150.00/hour
Support Staff	45.00/hour

Copyright ©2009 National Society of Professional Engineers for EJCDC. All rights reserved.

Amendment No. 1

Jefferson County Public Service District, Jefferson County, WV *and* Dunn Engineers, Inc.

GENERAL SERVICES

The Agreement for performing General Engineering Services for the Jefferson County Public Service District shall be amended to incorporate the Standards of Performance delineated below:

6.01 *Standards of Performance*

A. *Standard of Care:* The standard of care for all professional engineering and related services performed or furnished by Engineer under this Agreement will be the care and skill ordinarily used by members of the subject profession practicing under similar circumstances at the same time and in the same locality. Engineer makes no warranties, express or implied, under this Agreement or otherwise, in connection with Engineer's services.

B. *Technical Accuracy:* Owner shall not be responsible for discovering deficiencies in the technical accuracy of Engineer's services. Engineer shall correct deficiencies in technical accuracy without additional compensation, unless such corrective action is directly attributable to deficiencies in Owner-furnished information.

C. *Consultants:* Engineer may employ such Consultants as Engineer deems necessary to assist in the performance or furnishing of the services, subject to reasonable, timely, and substantive objections by Owner.

D. *Reliance on Others:* Subject to the standard of care set forth in Paragraph 6.01.A, Engineer and its Consultants may use or rely upon design elements and information ordinarily or customarily furnished by others, including, but not limited to, specialty contractors, manufacturers, suppliers, and the publishers of technical standards.

E. *Compliance with Laws and Regulations, and Policies and Procedures*:

1. Engineer and Owner shall comply with applicable Laws and regulations.

2. Prior to the Effective Date, Owner provided to Engineer in writing any and all policies and procedures of Owner applicable to Engineer's performance of services under this Agreement. provided to Engineer in writing. Engineer shall comply with such policies and procedures, subject to the standard of care set forth in Paragraph 6.01.A, and to the extent compliance is not inconsistent with professional practice requirements.

3. This Agreement is based on Laws and Regulations and Owner-provided written policies and procedures as of the Effective Date. Changes after the Effective Date to these Laws and Regulations, or to Owner-provided written policies and procedures, may be the basis for modifications to Owner's responsibilities or to Engineer's scope of services, times of performance, or compensation.

F. Engineer shall not be required to sign any documents, no matter by whom requested, that would result in the Engineer having to certify, guarantee, or warrant the existence of conditions whose existence the Engineer cannot ascertain. Owner agrees not to make resolution of any dispute with the Engineer or payment of any amount due to the Engineer in any way contingent upon the Engineer signing any such documents.

G. The general conditions for any construction contract documents prepared hereunder are to be the "Standard General Conditions of the Construction Contract" as prepared by the Engineers Joint Contract Documents Committee (EJCDC C-700, 2007 Edition) unless both parties mutually agree to use other general conditions by specific reference in Exhibit J.

H. Engineer shall not at any time supervise, direct, control, or have authority over any contractor work, nor shall Engineer have authority over or be responsible for the means, methods, techniques, sequences, or procedures of construction selected or used by any contractor, or the safety precautions and programs incident thereto, for security or safety at the Site, nor for any failure of a contractor to comply with Laws and Regulations applicable to such contractor's furnishing and performing of its work.

I. Engineer neither guarantees the performance of any Contractor nor assumes responsibility for any Contractor's failure to furnish and perform the Work in accordance with the Contract Documents.

J. Engineer shall not provide or have any responsibility for surety bonding or insurance-related advice, recommendations, counseling, or research, or enforcement of construction insurance or surety bonding requirements.

K. Engineer shall not be responsible for the acts or omissions of any Contractor, Subcontractor, or Supplier, or of any of their agents or employees or of any other persons (except Engineer's own agents, employees, and Consultants) at the Site or otherwise furnishing or performing any Work; or for any decision made regarding the Contract Documents, or any application, interpretation, or clarification, of the Contract Documents, other than those made by Engineer.

L. While at the Site, Engineer's employees and representatives shall comply with the specific applicable requirements of Contractor's and Owner's safety programs of which Engineer has been informed in writing.

6.02 *Design Without Construction Phase Services*

A. Engineer shall not be responsible for any Construction Phase services except those expressly required by the Owner. Engineer shall have no design, Shop Drawing review, or other obligations during construction and Owner assumes all responsibility for the application and interpretation of the Contract Documents. review and response to Contractor claims, contract administration, processing Change Orders, revisions to the Contract Documents during construction, construction surety bonding and insurance requirements, construction observation and review, review of payment applications, and all other necessary Construction Phase engineering and professional services. Owner waives all claims against the Engineer that may be connected in any way to Construction Phase engineering or professional services except for those expressly required by the Owner.

Jefferson County Public Service District	Oct 7 2013 Date
Dunn Engineers, Inc.	7 October 2013 Date

MEMORANDUM

Re:	Review and execute the addendum to the Yount, Hyde, & Barbour auditing engagement letter dated August 10, 2018
To:	Jefferson County PSD Board Members & Professionals
Date:	September 6, 2018
Preparers:	April Shultz, General Manager

Background:
At the June Board meeting, the Board voted and accepted the bid from Yount, Hyde & Barbour (YHB) in the amount not to exceed $27,000 to prepare the audit and associated reports pending clarification with assisting with the Public Service Commission reports. After receiving the engagement letter from YHB to perform the audit on August 10th, it mentioned additional costs that will be incurred which would exceed the $27,000.

Per YHB, there are two pieces that need approval at this meeting. First is the out-of-pocket expenses for the audit. Below is the verbiage from the original proposal that included the out-of-pocket expenses, not to exceed $750.

"Out of pocket expense not-to-exceed $750. Accounting assistance fees will be subject to adjustments based on unanticipated changes in the scope of our work and additional requests by management. We will not incur additional fees without your authorization."

The second item is assistance with the fixed asset listing and depreciation expense calculation. This service was prepared by the prior auditor but not included in the original RFP for services. The original price estimate was $750 and was included in the engagement letter.

Since the board approved the $22,000 audit and the $5,000 PSC report assistance (total of $27,000) previously, this would leave an approval of $1,500 necessary to cover the out-of-pocket and the fixed asset/depreciation non-attest services. Mr. Forshee executed the engagement letter noting the additional costs, but the Board now needs to approve. A copy of the signed engagement letter follows this memo.

Action:
The Board should approve the additional costs not to exceed $1500 to cover the out-of-pocket and the fixed asset/depreciation non-attest services.

YHB CPAs & Consultants

50 South Cameron St.
Winchester, VA 22601

540.662.3417
YHBcpa.com
540.662.4211

August 10, 2018

To the Board of Directors
Jefferson County Public Service District
340 Edmond Road, Suite A
Kearneysville, WV 25430

Attention: Board of Directors

The Objective and Scope of the Audit of the Financial Statements

You have requested that we audit the financial statements of Jefferson County Public Service District (the "District"), which comprise business-type activities, each major fund and aggregate remaining fund information as of and for the year ended June 30, 2018 which collectively comprise the basic financial statements. We are pleased to confirm our acceptance and our understanding of this audit engagement by means of this letter.

Our audit will be conducted with the objective of our expressing an opinion on the financial statements.

The Responsibilities of the Auditor

We will conduct our audit in accordance with auditing standards generally accepted in the United States of America (GAAS) and *Government Auditing Standards* issued by the Comptroller General of the United States (GAS). Those standards require that we plan and perform the audit to obtain reasonable assurance about whether the financial statements are free from material misstatement. An audit involves performing procedures to obtain audit evidence about the amounts and disclosures in the financial statements. The procedures selected depend on the auditor's judgment, including the assessment of the risks of material misstatement of the financial statements, whether due to fraud or error. An audit also includes evaluating the appropriateness of accounting policies used and the reasonableness of significant accounting estimates made by management, as well as evaluating the overall presentation of the financial statements.

Because of the inherent limitations of an audit, together with the inherent limitations of internal control, an unavoidable risk that some material misstatements may not be detected exists, even though the audit is properly planned and performed in accordance with GAAS. Also, an audit is not designed to detect errors or fraud that are immaterial to the financial statements. The determination of abuse is subjective; therefore, GAS does not expect us to provide reasonable assurance of detecting abuse.

In making our risk assessments, we consider internal control relevant to the District's preparation and fair presentation of the financial statements in order to design audit procedures that are appropriate in the circumstances but not for the purpose of expressing an opinion on the effectiveness of the entity's internal control. However, we will communicate to you in writing concerning any significant deficiencies or material weaknesses in internal control relevant to the audit of the financial statements that we have identified during the audit.

We will also communicate to the Board of Directors (a) any fraud involving senior management and fraud (whether caused by senior management or other employees) that causes a material misstatement of the financial statements that becomes known to us during the audit, and (b) any instances of noncompliance with laws and regulations that we become aware of during the audit (unless they are clearly inconsequential).

The funds that you have told us are maintained by the District that are to be included as part of our audit are the water fund and the sewer fund.

Our report on internal control will include any significant deficiencies and material weaknesses in controls of which we become aware as a result of obtaining an understanding of internal control and performing tests of internal control consistent with requirements of the standards and regulations identified above. Our report on compliance will address material errors, fraud, abuse, violations of compliance obligations, and other responsibilities imposed by state and federal statutes and regulations or assumed by contracts; and any state or federal grant, entitlement or loan program questioned costs of which we become aware, consistent with requirements of the standards and regulations identified above.

The Responsibilities of Management and Identification of the Applicable Financial Reporting Framework

Our audit will be conducted on the basis that management and, when appropriate, those charged with governance acknowledge and understand that they have responsibility:

1. For the preparation and fair presentation of the financial statements in accordance with accounting principles generally accepted in the United States of America;
2. To evaluate subsequent events through the date the financial statements are issued or available to be issued, and to disclose the date through which subsequent events were evaluated in the financial statements. Management also agrees that it will not evaluate subsequent events earlier than the date of the management representation letter referred to below;
3. For the design, implementation, and maintenance of internal control relevant to the preparation and fair presentation of financial statements that are free from material misstatement, whether due to fraud or error; and
4. For establishing and maintaining effective internal control over financial reporting, and for informing us of all significant deficiencies and material weaknesses in the design or operation of such controls of which it has knowledge;
5. For report distribution; and

6. To provide us with:
   a. Access to all information of which management is aware that is relevant to the preparation and fair presentation of the financial statements such as records, documentation, and other matters;
   b. Additional information that we may request from management for the purpose of the audit; and
   c. Unrestricted access to persons within the entity from whom we determine it necessary to obtain audit evidence.

As part of our audit process, we will request from management and, when appropriate, those charged with governance written confirmation concerning representations made to us in connection with the audit, including among other items:

1. That management has fulfilled its responsibilities as set out in the terms of this letter; and
2. That it believes the effects of any uncorrected misstatements aggregated by us during the current engagement and pertaining to the latest period presented are immaterial, both individually and in the aggregate, to the financial statements taken as a whole.

You have informed us that the District has made expenditures of less than $750,000 of monies received from any federal award program. This consideration included the use of all federal funds whether received directly from a federal department or agency or as a secondary recipient from any other source, received either directly or indirectly as commodities or other tangible or intangible property from a federal award program, or participated in or received any benefits from any federal loan, loan guarantee or insurance program during the audit period requiring any federal program compliance auditing.

Management is responsible for identifying and ensuring that the District complies with the laws and regulations applicable to its activities, and for informing us about all known material violations of such laws or regulations. In addition, management is responsible for the design and implementation of programs and controls to prevent and detect fraud, and for informing us about all known or suspected fraud affecting the entity involving management, employees who have significant roles in internal control, and others where the fraud could have a material effect on the financial statements. Management is also responsible for informing us of its knowledge of any allegations of fraud or suspected fraud affecting the entity received in communications from employees, former employees, analysts, regulators, or others.

Management is responsible for the preparation of the required supplementary information (RSI), including management's discussion and analysis (MD&A), and supplementary information, known as (SI) in accordance with accounting principles generally accepted in the United States of America. Management agrees to include the auditor's report on RSI and SI in any document that contains the RSI or SI and that indicates that the auditor has reported on such RSI or SI. Management also agrees to present the SI with the audited financial statements or, if the SI will not be presented with audited financial statements, to make the audited financial statements readily available to the intended users of the SI no later than the date of issuance of the SI and the auditor's report thereon.

The Board of Directors is responsible for informing us of its views about the risks of fraud within the entity, and its knowledge of any fraud or suspected fraud affecting the entity.

Our association with an official statement is a matter for which separate arrangements will be necessary. The District agrees to provide us with printer's proofs or masters of such offering documents for our review and approval before printing, and with a copy of the final reproduced material for our approval before it is distributed. In the event our auditor/client relationship has been terminated when the District, seeks such consent, we will be under no obligation to grant such consent or approval.

Jefferson County Public Service District agrees that it will not associate us with any public or private securities offering without first obtaining our consent. Therefore, Jefferson County Public Service District agrees to contact us before it includes our reports, or otherwise makes reference to us, in any public or private securities offering.

We agree that our association with any proposed offering is not necessary, providing Jefferson County Public Service District agrees to clearly indicate that we are not associated with the contents of any such official statement or memorandum. Jefferson County Public Service District agrees that the following disclosure will be prominently displayed in any such official statement or memorandum:

> *Yount, Hyde & Barbour, P.C., our independent auditor, has not been engaged to perform, and has not performed, since the date of its report included herein, any procedures on the financial statements addressed in that report. Yount, Hyde & Barbour, P.C. also has not performed any procedures relating to this official statement.*

Because Yount, Hyde & Barbour, P.C. will rely on Jefferson County Public Service District and its management and Board of Directors to discharge the foregoing responsibilities, Jefferson County Public Service District holds harmless and releases Yount, Hyde & Barbour, P.C., its partners, and employees from all claims, liabilities, losses, and costs arising in circumstances where there has been a knowing misrepresentation by a member of Jefferson County Public Service District's management which has caused, in any respect, Yount, Hyde & Barbour, P.C.'s breach of contract or negligence. This provision shall survive the termination of this arrangement for services.

Records and Assistance

If circumstances arise relating to the condition of the District's records, the availability of appropriate audit evidence or indications of a significant risk of material misstatement of the financial statements because of error, fraudulent financial reporting or misappropriation of assets which, in our professional judgment, prevent us from completing the audit or forming an opinion, we retain the unilateral right to take any course of action permitted by professional standards, including declining to express an opinion or issue a report, or withdrawing from the engagement.

During the course of our engagement, we may accumulate records containing data that should be reflected in the District's books and records. The District will determine that all such data, if necessary, will be so reflected. Accordingly, the District will not expect us to maintain copies of such records in our possession.

The assistance to be supplied by the District's personnel, including the preparation of schedules and analyses of accounts, has been discussed and coordinated with April Shultz, General Manager. The timely and accurate completion of this work is an essential condition to our completion of the audit and issuance of our audit report.

In connection with our audit, you have requested us to perform certain non-audit services necessary for the preparation of the financial statements, including the preparation of the financial statement, assistance with PSC report preparation and maintaining depreciation schedules. The GAS independence standards require that the auditor maintain independence so that opinions, findings, conclusions, judgments and recommendations will be impartial and viewed as impartial by reasonable and informed third parties. Before we agree to provide a non-audit service to the District, we determine whether providing such a service would create a significant threat to our independence for GAS audit purposes, either by itself or in aggregate with other non-audit services provided. A critical component of our determination is consideration of management's ability to effectively oversee the non-audit services to be performed. Jefferson County Public Service District has agreed that April Shultz, General Manager, possesses suitable skill, knowledge or experience and that the individual understands the non-attest services to be performed sufficiently to oversee them. Accordingly, the management of Jefferson County Public Service District agrees to the following:

1. Jefferson County Public Service District has designated April Shultz, General Manager as a senior member of management who possesses suitable skill, knowledge and experience to oversee the services;

2. April Shultz, General Manager will assume all management responsibilities for subject matter and scope of the non-audit services;

3. The District will evaluate the adequacy and results of the services performed; and

4. The District accepts responsibility for the results and ultimate use of the services.

GAS further requires that we establish an understanding with the District's management and those charged with governance of the objectives of the non-audit services, the services to be performed, the entity's acceptance of its responsibilities, the auditor's responsibilities and any limitations of the non-audit services. We believe this letter documents that understanding.

Other Relevant Information

From time to time and depending upon the circumstances, we may use third-party service providers to assist us in providing professional services to you. In such circumstances, it may be necessary for us to disclose confidential client information to them. We enter into confidentiality agreements with all third-party service providers and we are satisfied that they have appropriate procedures in place to prevent the unauthorized release of your confidential information to others.

In accordance with GAS, a copy of our most recent peer review report is enclosed for your information.

Fees, Costs, and Access to Workpapers

Our fees for the audit and accounting services described above are based upon the value of the services performed and the time required by the individuals assigned to the engagement, plus direct expenses. Our fee estimate and completion of our work is based upon the following criteria:

1. Anticipated cooperation from District personnel
2. Timely responses to our inquiries
3. Timely completion and delivery of client assistance requests
4. Timely communication of all significant accounting and financial reporting matters
5. The assumption that unexpected circumstances will not be encountered during the engagement

If any of the aforementioned criteria are not met, then fees may increase. Our fee estimate for the services outlined in this letter is $17,500 (financial statement audit), $4,500 (financial statement preparation), $5,000 (assistance with PSC reports) and $750 (maintenance of depreciation schedules), plus direct expenses. Interim billings will be submitted as work progresses and as expenses are incurred. We will submit our bill for these services promptly upon rendering the report. Billings are due upon submission.

Depreciation - direct expenses to be voted @ 9/10/18 Board Meeting. JRF RCF

Our professional standards require that we perform certain additional procedures, on current and previous years' engagements, whenever a partner or professional employee leaves the firm and is subsequently employed by or associated with a client in a key position. Accordingly, the District agrees it will compensate Yount, Hyde & Barbour, P.C. for any additional costs incurred as a result of the District's employment of a partner or professional employee of Yount, Hyde & Barbour, P.C.

In the event we are requested or authorized by Jefferson County Public Service District or are required by government regulation, subpoena, or other legal process to produce our documents or our personnel as witnesses with respect to our engagement for Jefferson County Public Service District, Jefferson County Public Service District will, so long as we are not a party to the proceeding in which the information is sought, reimburse us for our professional time and expenses, as well as the fees and expenses of our counsel, incurred in responding to such requests.

The documentation for this engagement is the property of Yount, Hyde & Barbour, P.C. However, you acknowledge and grant your assent that representatives of the cognizant or oversight agency or their designee, other government audit staffs, and the U.S. Government Accountability Office shall have access to the audit documentation upon their request and that we shall maintain the audit documentation for a period of at least three years after the date of the report, or for a longer period if we are requested to do so by the cognizant or oversight agency. Access to requested documentation will be provided under the supervision of Yount, Hyde & Barbour, P.C. audit personnel and at a location designated by our firm.

Claim Resolution

Jefferson County Public Service District and Yount, Hyde & Barbour, P.C. agree that no claim arising out of services rendered pursuant to this arrangement letter shall be filed more than the earlier of two years after the date of the audit report issued by Yount, Hyde & Barbour, P.C. or the date of this arrangement letter if no report has been issued. In no event shall either party be liable to the other for claims of punitive, consequential, special, or indirect damages. Yount, Hyde & Barbour, P.C.'s liability for all claims, damages and costs of Jefferson County Public Service District arising from this engagement is limited to the amount of fees paid by Jefferson County Public Service District to Yount, Hyde & Barbour, P.C. for the services rendered under this arrangement letter.

Information Security - Miscellaneous Terms

Yount, Hyde, & Barbour, P.C. is committed to the safe and confidential treatment of Jefferson County Public Service District's proprietary information. Yount, Hyde, & Barbour, P.C. is required to maintain the confidential treatment of client information in accordance with relevant industry professional standards which govern the provision of services described herein. Jefferson County Public Service District agrees that it will not provide Yount, Hyde, & Barbour, P.C with any unencrypted electronic confidential or proprietary information, and the parties agree to utilize commercially reasonable measures to maintain the confidentially of Jefferson County Public Service District information, including the use of collaborate sites to ensure the safe transfer of data between the parties.

Yount, Hyde, & Barbour, P.C. may terminate this relationship immediately in its sole discretion if Yount, Hyde, & Barbour, P.C. determines that continued performance would result in a violation of law, regulatory requirements, applicable professional standards or Yount, Hyde, & Barbour, P.C.'s client acceptance or retention standards, or if Jefferson County Public Service District is placed on a verified sanctioned entity list or if any director or executive of, or other person closely associated with, Jefferson County Public Service District or its affiliates is placed on a verified sanctioned person list, in each case, including but not limited to lists promulgated by the Office of Foreign Assets Control of the U.S. Department of the Treasury, the U.S. State Department, the United Nations Security Council, the European Union or any other relevant sanctioning authority.

If any term or provision of this arrangement letter is determined to be invalid or unenforceable, such term or provision will be deemed stricken, and all other terms and provisions will remain in full force and effect.

Reporting

We will issue a written report upon completion of our audit of Jefferson County Public Service District's financial statements. Our report will be addressed to the Board of Directors of Jefferson County Public Service District. We cannot provide assurance that an unmodified opinion will be expressed. Circumstances may arise in which it is necessary for us to modify our opinion, add an emphasis-of-matter or other-matter paragraph(s), or withdraw from the engagement.

In addition to our reports on the Jefferson County Public Service District's financial statements, we will also issue the following types of reports:

- Report on internal control related to the financial statements. This report will describe the scope of testing of internal control and the results of our tests of internal controls.

- Report on compliance with laws, regulations, and the provision of contracts or grant agreements. We will report on any noncompliance which could have a material effect on the financial statements.

I am the engagement shareholder and responsible for supervising the engagement and signing the report or authorizing another individual to sign it.

This letter constitutes the complete and exclusive statement of agreement between Yount, Hyde & Barbour, P.C. and Jefferson County Public Service District, superseding all proposals, oral or written, and all other communications, with respect to the terms of the engagement between the parties.

Electronic Signatures and Counterparts

Each party hereto agrees that any electronic signature of a party to this agreement or any electronic signature to a document contemplated hereby (including any representation letter) is intended to authenticate such writing and shall be as valid, and have the same force and effect, as a manual signature. Any such electronically signed document shall be deemed (i) to be "written" or "in writing," (ii) to have been signed and (iii) to constitute a record established and maintained in the ordinary course of business and an original written record when printed from electronic files. Each party hereto also agrees that electronic delivery of a signature to any such document (via email or otherwise) shall be as effective as manual delivery of a manual signature. For purposes hereof, "electronic signature" includes, but is not limited to, (i) a scanned copy (as a "pdf" (portable document format) or other replicating image) of a manual ink signature, (ii) an electronic copy of a traditional signature affixed to a document, (iii) a signature incorporated into a document utilizing touchscreen capabilities or (iv) a digital signature. This agreement may be executed in one or more counterparts, each of which shall be considered an original instrument, but all of which shall be considered one and the same agreement. Paper copies or "printouts," of such documents if introduced as evidence in any judicial, arbitral, mediation or administrative proceeding, will be admissible as between the parties to the same extent and under the same conditions as other original business records created and maintained in documentary form. Neither party shall contest the admissibility of true and accurate copies of electronically signed documents on the basis of the best evidence rule or as not satisfying the business records exception to the hearsay rule.

Please sign and return the attached copy of this letter to indicate your acknowledgment of, and agreement with, the arrangements for our audit of the financial statements including our respective responsibilities.

YOUNT, HYDE & BARBOUR, P.C.

Jennifer Files

Jennifer Files, CPA, CFE, CVA, Principal

Confirmed on behalf of Jefferson County Public Service District:

Name

8/22/2018

Date

Davis Kinard & Co, PC
CERTIFIED PUBLIC ACCOUNTANTS
Quality. Integrity. Knowledge.

First Financial Bank Building
400 Pine Street, Ste. 600, Abilene, TX 79601
325.672.4000 / 800.588.2525 / f: 325.672.7049
www.dkcpa.com

System Review Report

September 29, 2016

To the Shareholders of
Yount, Hyde & Barbour, P.C.
and the AICPA National Peer Review Committee

We have reviewed the system of quality control for the accounting and auditing practice of **Yount, Hyde & Barbour, P.C.** (the firm) applicable to engagements not subject to PCAOB permanent inspection in effect for the year ended April 30, 2016. Our peer review was conducted in accordance with the Standards for Performing and Reporting on Peer Reviews established by the Peer Review Board of the American Institute of Certified Public Accountants. As a part of our peer review, we considered reviews by regulatory entities, if applicable, in determining the nature and extent of our procedures. The firm is responsible for designing a system of quality control and complying with it to provide the firm with reasonable assurance of performing and reporting in conformity with applicable professional standards in all material respects. Our responsibility is to express an opinion on the design of the system of quality control and the firm's compliance therewith based on our review. The nature, objectives, scope, limitations of, and the procedures performed in a System Review are described in the standards at www.aicpa.org/prsummary.

As required by the standards, engagements selected for review included engagements performed under *Government Auditing Standards*; audits of employee benefit plans, audits performed under FDICIA, and examinations of service organizations [Service Organizations Control (SOC) 1 and 2 engagements].

In our opinion, the system of quality control for the accounting and auditing practice of **Yount, Hyde & Barbour, P.C.** applicable to engagements not subject to PCAOB permanent inspection in effect for the year ended April 30, 2016, has been suitably designed and complied with to provide the firm with reasonable assurance of performing and reporting in conformity with applicable professional standards in all material respects. Firms can receive a rating of *pass*, *pass with deficiency(ies)* or *fail*. **Yount, Hyde & Barbour, P.C.** has received a peer review rating of *pass*.

Davis Kinard & Co, PC

Certified Public Accountants

MEMORANDUM

Re:	Discuss JCPSD Sanitary Sewer Specifications and Standards
To:	Jefferson County PSD Board Members & Professionals
Date:	September 6, 2018
Preparers:	April Shultz, General Manager

Background:
Chairman, Roger Forshee requested this agenda item. He has several concerns he will address at the meeting.

The District currently adheres to the 2016 revised Sanitary Sewer Specification and Standards. A copy follows this memo.

Action:
Staff is not aware of any action at this time.

JEFFERSON COUNTY
PUBLIC SERVICE DISTRICT

SANITARY SEWER
SPECIFICATIONS
AND
STANDARDS

REVISED 2016

January 21, 2016

Sewer Collection System
Standards and Specifications

Materials listed in these standards and specifications represent the absolute minimum requirements acceptable for use by the Jefferson County Public Service District.
Specifically, the Jefferson County Public Service District (JCPSD) has reviewed and consulted the appropriate standards writing agency with a view to determine what materials most suit the specific design criteria, maintenance needs, and cost requirement of the JCPSD.

All pipe, fittings, and other related materials used in the construction of lines shall be in full compliance with the written specifications and details of the JCPSD's latest modifications or revisions.

Where a manufacturers name is used in these specifications, it is used to designate a minimum standard of quality based on the specific design characteristics to the manufacturer specified, not limited to, but including, material quality, flow characteristics, interchangeability, design features, inventory, warranty, maintenance costs, and service.

Equality evaluation shall be determined not solely, on whether a product is capable of doing an adequate job, but rather if a product will perform the specific job specified, as well as meeting the additional specific requirements set forth herein.

The JCPSD or its representative will be the sole judge as to whether a product shall be approved as an equal. A written point-by-point detailed comparison to material currently specified shall be submitted with any points of exceptions noted when requesting approval of alternative material as "or equal".

Any product not specified in the latest modifications or revisions of the JCPSD's written specifications and details must have the JCPSD General Manager's approval in writing prior to shipment to projects within the JCPSD's jurisdiction.

Representative samples of materials, intended for incorporation in the specifications of the JCPSD shall be submitted for examination and/or test. i

W
ri
t

t
e
n
w
a
r
r
a
n
ti
e
s
,
a
l
o
n
g
w
it
h
c
e
r
ti
fi
c
a
ti
o
n
s
o
f
m
a
t
e
ri
a
l
c
o
m
p

li
a
n
c
e
s
,
s
h
a
ll
b
e
r
e
q
u
ir
e
d
f
o
r
a
ll
m
a
t
e
ri
a
l
s
s
u
b
m
it
t
e
d
f
o
r
r

e
v
i
e
w
.

No set time limits shall be given for material review. It is not the intent of the JCPSD to compromise the current specifications as written.

Any product shipped to projects without prior approval from the JCPSD General Manager shall be deemed unresponsive to the JCPSD's authority, and shall be removed and replaced by approved materials at no cost to the JCPSD.

Furthermore, any product shipped without prior written approval from the JCPSD General Manager shall be disqualified for review for acceptance.

No construction shall begin until all right of ways and/or easements have been acquired and properly recorded among Land Records at the Jefferson County Courthouse.

All sanitary sewer mains and laterals shall maintain a minimum horizontal clearance of ten (10) feet and a minimum vertical clearance of eighteen (18) inches at all times of any existing or proposed water main or lateral. A minimum horizontal clearance of five (5) feet and minimum vertical clearance of eighteen (18) inches shall be maintained of all other utilities. In special cases, whereas these criteria cannot be met, the sanitary sewer line shall be encased in concrete. The sanitary sewer pipe system shall maintain a minimum of 36 inches of cover from final grade. Force main pipes shall maintain a minimum of 42 inches of cover from final grade. Sewer mains and laterals shall never be installed at an elevation above the water main.

All underground sanitary sewer systems must be properly identified.

<u>Warning and Identification Tape</u>

Composition of tape shall be polyethylene and have film thickness of four (4.0) mil nominal and a width of six (6) inches. The recommended location of the tape is 18–24 inches below the surface directly above the installation. Color shall be bright green with black printed letters on one side stating:

Caution Caution
Sewer Line Buried Below

Tape shall be Allen Markline as manufactured by Allen Systems or equal. This tape shall be installed in conjunction with sanitary sewers, including service connections.

ii All
ex
p
os
ed
sa
ni
ta
ry
se
w
er
st
ru
ct
ur
es
sh
all
be
pr
o
pe
rly id
en
tif
ie
d
as
Sa
ni
ta
ry
Se
w
er
.

The Contractor shall provide the District a minimum notice of ten (10) business days prior to the start of construction.

Design criteria shall be based upon these Standards and Specifications. The design engineer shall be responsible for pipe sizing, pipe pressure rating (where applicable), and assuring ground pressure resistance is adequate for depth of pipe. The Developer shall be responsible for ensuring that all lines installed have been adequately sized for future development and approved by the JCPSD General Manager.

The Jefferson County Public Service District shall be held harmless of design methods and techniques utilized by the developer's engineer.

Sewer Collection System
Specifications

Table of Contents

Page

Section 100 – Earthwork 100-i

Section 200 – Sanitary Sewer Pipe
Gravity Flow 200-i

Section 300 – Sanitary Sewer Pipe
Force Main 300-i

Section 400 – Structures 400-i

Section 500 – Pressure Grinder Pump 500-i

Section 600 – Pump Station 600-i

Section 700 – Restoration and Paving 700-i

Appendix A – Plan Submittals
Checklist A-1

Appendix B – Glossary B-1

Appendix C – Standard Details & Drawings C-i

Appendix D – Standard Forms & Test Reports D-i

Sewer Collection System Specifications

Section 100

Page

100.00 – Earthwork 100

101.00 – Clearing & Grubbing	101
102.00 – Class 1 Excavation	102
103.00 – Select Backfill	103
104.00 – Pipe Installations	
Casings-Bore & Jack	104
105.00 – Trenching	105
105.10 – Dewatering	105.1
105.20 – Blasting	105.2
105.30 – Sheeting & Shoring	105.3
106.00 – Bedding	106
107.00 – Stream Crossing	107

Section 100

Earthwork

This section includes excavation and backfill for site grading, driveway/roadway construction, and utility installation.

Other applicable Standards & Specifications include:

Road Crossings – Road crossings shall be as shown on the plans and in keeping with the West Virginia Division of Highways Specifications latest revision thereof.

Railroad Crossings – Railroad crossings shall be as shown on the plans and in keeping with the railroad owner's requirements.

Stream Crossings – Stream crossings shall be as shown on the plans and in keeping with DEP, and the Public Land Corporation requirements.

All permits must be provided to the JCPSD at least 48 hours prior to the start of construction.

The contractor shall contact MISS UTILITY of West Virginia at 1-800-245-4848 forty-eight (48) hours prior to excavation.

Section 101.00

Clearing & Grubbing

The full-width sanitary sewer right of way and/or easement shall be free of trees, structures, and any other obstructions that may impede the construction, maintenance, or repair of the sanitary sewer system. Clearing and grubbing shall extend to the limits of disturbance as shown on the approved Contract Plans. All tree stumps and structures shall be completely removed, unless otherwise noted. This includes the excavation of the top six (6) inches of existing grade in order to remove topsoil and root mat. All excavated topsoil shall be properly stockpiled until the completion of all excavation and backfill operations and then that topsoil shall be re-graded over all disturbed non-paved areas.

Section 102.00

Class 1 Excavation

Any elevation change to existing grade made in accordance with the approved contract plans. This item pertains to on-site grading, including access roads to the District's facilities. Trenching is inclusive of pipe and structure installation and is not included under this item.

A soils engineer's report shall be accompanied with contract plan submittal to Jefferson County Public Service District, (JCPSD). On-site soils used for backfill shall neither contain any organic material nor any other unsuitable material for the backfill of sanitary sewer lines, manholes and other appurtenances. Frozen material shall not be permitted within controlled backfills. The soil shall be placed in eight (8) inch loose lifts and compacted to the minimum of 95% of the maximum dry density, determined in accordance with A.A.S.H.T.O., Standard T99, Method C. The maximum dry density shall weigh a minimum of 100 pounds per cubic foot (pcf). The Liquid Limit (LL) shall not exceed 40 and the Plasticity Index (PI) shall not exceed 12. The soil shall be placed and compacted with the moisture content in the range of plus or minus two percent (2%) of the optimum moisture content. Whenever the excavation is within the limits of existing pavement designed to carry vehicular traffic, the minimum allowable compaction shall be 100% of the maximum dry density throughout the top twelve (12) inches of sub-grade.

No mechanical vibrating or impact tampers should be used in first twenty fourinches (24") of lifts above PVC pipe.

Any settlement noted within the warranty period in backfill, or in structures built over the backfill, will be considered to be caused by improper construction methods and shall be corrected at no cost to JCPSD. Structures or paved surfaces damaged by settlement shall be restored to their original condition at no cost to JCPSD.

Section 103.00

Select Backfill

Crusher run, CR-8 (1-inch minus), gradation must meet latest WVDOH specifications. Crusher run (CR-8) shall be compacted in eight (8) inch loose lifts and compacted to 95% of maximum density, determined in accordance with A.A.S.H.T.O., Standard T-180, Method D. The moisture content of the range is plus or minus 2% of the optimum moisture content. Whenever the excavation is within the limits of existing pavement designed to carry vehicular traffic, the minimum allowable compaction shall be 100% of the maximum dry density throughout the top twelve (12) inches of sub-grade. Whenever the backfill is within a public roadway, WVDOH specifications must be met.

No mechanical vibrating or impact tampers should be used in first twenty-four (24) inches of lifts above PVC pipe.

Any settlement noted within the warranty period in backfill, or in structures built over the backfill, will be considered to be caused by improper construction methods and shall be corrected at no cost to JCPSD. Structures or paved surfaces damaged by settlement shall be restored to their original condition at no cost to JCPSD.

Section 104.00

Pipe Installations in Casings – Bore & Jack

The casing must fully rest on the support of the backfill along its entire length.

The pipe must be braced and anchored in a manner that will permit it to be removed with reasonable ease.

Use APS Polyethylene Casing Spacers, Model CI, or equal approved by the JCPSD. Casing spacers shall be placed 4.5 foot-on-center and one foot on both sides of each joint. End seals shall be provided on ends of casing.

Section 105.00

Trenching

Method of trenching shall be approved by the contractor's safety advisor and must meet Occupational Health and Safety Administration (OSHA) specifications and requirements. All pipes shall be laid with not less than thirty-six inches of cover. This applies to ground level or average slopes. Whenever crossing steep breaks

in contour or small streams, either sufficient excavation shall be made to reduce the slopes to a minimum or bends shall be used. No kinks or sharp metal bends will be allowed which will put pipe in a strain or rob a joint of its full bearing of joint material.

Trenches shall generally follow straight lines, with pipe laid straight therein. Curves of large radius are frequently necessary, both horizontal and vertical, and can be made without special fittings. All abrupt changes of profile, sharp bends or turns, will require specials and these specials shall be furnished and installed by contractor, as approved by the JCPSD.

The trench walls should be straight with a minimum trench width of three (3) times the diameter of the pipe. The pipe shall be lowered into the trench one joint at a time. No pipe shall be laid which has a bearing of either pipe or bell upon rock. A cushion of at least six inches of select bedding material must be provided in all rock excavation; that is all rock must be excavated to a depth of six inches below pipe, and earth or other approved select backfill material provided for the bottom of trench, for bedding, and to twelve inches above the pipe. Where bolted joints are used, sufficient bell holes must be excavated before lowering pipe in trench as will allow for inspection and free use of tools.

No trench shall be opened more than 60 feet in advance of the pipe laying, unless approved otherwise by the Engineer. Any ditch opened in advance is subject to being refilled at contractor's expense. All open trenches, or trenches which are not completely backfilled and finished, or any opening of any kind left by contractor must be protected by lights, warning signs, barricades, steel plates and other equipment conforming to the safety requirements of the West Virginia Division of Highways, Federal, State, or Local public agency having jurisdiction. The most stringent of these requirements shall apply. The site shall be left clean of surplus material or rubbish of any kind. All surplus material must be removed from the site, at the expense of the contractor, to such place the contractor can arrange for disposal.

See Section 200, Sanitary Sewer Pipe – Gravity Flow, and Section 300, Sanitary Sewer Pipe – Force Main.

No mechanical vibrating or impact tampers should be used in first twenty-four (24) inches of lifts above PVC pipe.

All underground sanitary sewer systems must be properly identified.

Warning and Identification Tape

Composition of tape shall be polyethylene and have film thickness of four (4.0) mil nominal and a width of six (6) inches. The recommended location of the tape is 18–24 inches below the surface directly above the installation. Color shall be bright green with black printed letters on one side stating:

Caution Caution
Sewer Line Buried Below

Tape shall be Allen Markline as manufactured by Allen Systems or equal. This tape shall be installed in conjunction with sanitary sewers, including service connections.

Any settlement of the trench noted within the warranty period in backfill, or in structures built over the backfill will be considered to be caused by improper construction methods and shall be corrected at no cost to JCPSD. Structures or paved surfaces damaged by settlement shall be restored to their original condition at no cost to JCPSD.

Section 105.10

Dewatering

Trenches shall be dewatered as required to provide a dry trench in which to lay the pipe. Dewatering, where required, may be done by pump or well point system as determined by the Contractor.

Section 105.20

Blasting

All blasting shall conform to all County, State, Federal rules and requirements. All precautions necessary to protect persons and property must be used in handling explosives. All blasts shall be covered completely and carefully with rope mat or heavy timbers chained together or equally suitable protection so that no chips or rocks will be thrown from the trench. Holes shall be loaded with light charges, but not near the top. Proper warning to adjacent property owners as well as pedestrian and vehicular traffic shall be given before exploding shots.

The contractor is solely responsible for injury to persons or property which may result from use of explosives and no act of the engineer in failure to exercise control of methods of blasting or handling of explosives shall in any way relieve the contractor of responsibility for injury and damage resulting from the storage or use of explosives. All state or local permits, rules or ordinances or laws governing use of explosives must be observed.

Section 105.30

Sheeting & Shoring

Method of trenching shall be approved by the contractor's safety advisor and must meet Occupational Health and Safety Administration (OSHA) specifications and requirements. Sheeting and shoring shall be provided within trenches in accordance with the latest OSHA Regulations. All sheeting, shoring, and bracing of trenches shall conform to the safety requirements of the Federal, State, or Local public agency having jurisdiction. The most stringent of these requirements shall apply. The sheeting and shoring shall remain in-place as the pipe is installed. The sheeting and shoring shall be removed as the backfill operation occurs.

Section 106.00

Granular Bedding Material

The bedding material below the pipe shall be prepared before the pipe is lowered into the trench. Only Class A, B, or C bedding (ASCE Manuals and Reports on Engineering Practice No. 37 – WPCF Manual of Practice No. 9) will be permitted. See JCPSD Standard Details S-1 through S-6. The Class of bedding shall be determined by the Engineer to provide the strength necessary for the soil and load conditions that will be encountered. Supplementary foundation material (bedding) shall be ¾-inch or smaller crushed stone or course gravel or other aggregate as approved by the Engineer. Granular bedding material shall meet the latest WVDOH specifications. In all cases, the bottom quadrant of the pipe shall be fully and uniformly supported. Bell holes shall be carefully excavated at proper intervals so that the bells support no part of the load. The full load shall rest on the barrel of the pipe. Where ground water conditions require pumping or where unsuitable soils are encountered, the trench shall be excavated a minimum of four (4) inches below grade and backfilled with a suitable approved bedding material to pipe laying grade. A cushion of at least six inches of select bedding material must be provided in all rock excavation; that is all rock must be excavated to a depth of six inches below pipe, and earth or other approved select backfill material provided in the bottom of trench for bedding and continued to twelve inches above the pipe. Supplementary bedding material shall be limestone sand, No. 57 aggregate or other select material approved by the Engineer.

105.4

January 21, 2016

Section 107.00

Stream Crossings

Where trenches cross-streams, pipe shall be embedded not less than thirty-six (36) inches below the stream bottom. In large streams Class 55 ball and socket ductile iron river crossing pipe shall be used across the stream and for a distance of 10 feet beyond the top of the stream bank for 6-inch and 8-inch lines. For small streams less than 8 feet wide, standard ductile iron pipe may be used. Two (2) inch waterline stream crossing shall be SDR-17 Class 250 PVC Yelomine, P.V.C.

PVC Yelomine sweep fittings shall be used for any bends required. Restraining devices shall be used to connect to MJ fittings.

Sewer Collection System Specifications

Section 200

	Page
200.00 – Sanitary Sewer Pipe - Gravity Flow	200
201.00 – Polyvinyl Chloride (PVC) Pipe	201
202.00 – Polyvinyl Chloride Pipe (SDR 50 R 35 PVC)	202
203.00 – Inspection and Testing of PVC Pipe	203
Physical Test Requirements	203
Certification	203 b
Marking and Delivery	203 b
204.00 – Ductile Iron Pipe	204
205.00 – Polyethylene Pipe	205
206.00 – River Crossing Pipe	206
207.00 – Testing Sewers for Leaks and Infiltration	207
208.00 – Tees and Wyes	208
209.00 – Service Laterals	209

Section 200

Sanitary Sewer Pipe – Gravity Flow

All sanitary sewer mains and laterals shall maintain a minimum horizontal clearance of ten (10) feet and a minimum vertical clearance of eighteen (18) inches at all times of any existing or proposed water main or lateral. A minimum horizontal clearance of five (5) feet and minimum vertical clearance of eighteen (18) inches shall be maintained of all other utilities. In special cases, whereas these criteria cannot be met, the sanitary sewer line shall be encased in concrete. The sanitary sewer pipe system shall maintain a minimum of 30 inches of cover from top of pipe to final grade. Sewer mains and laterals shall never be installed at an elevation above the water main.

Gravity sewers shall be sized to operate with a minimum of a 4.0 peak factor for laterals and the calculated peak factor determined by the "Ten States Standards" method of predicting the peak flows in sewage collection systems for trunk lines and interceptors of larger than a twelve (12) inch diameter. Attached to these specifications is an exert from the Recommended Standards for Wastewater Facilities Policies for the Design, Review, and Approval of Plans and Specifications for Wastewater Collection and Treatment Facilities 1997 Edition commonly referred to as the “Ten States Standards” method of predicting the peak flows in sewage collection systems. These standards are to be used to determine the peak factor required for gravity lines larger than eight (8) inches for the Jefferson County PSD collection systems.

Plastic (Polyvinyl Chloride), High Density Polyethylene (HDPE), and ductile iron are acceptable pipe materials. Sewer pipe and fittings shall conform to currently dated standards of the American Society for Testing Materials (ASTM); American Standards Association (ASA); American Water Works Association (AWWA) or General Services Administration (Federal Specification) for the types of pipe suitable for the use intended. Certifications of compliance pertaining to the following specifications shall be required from the manufacturer before acceptance of delivery and award of contract.

All pipe and specials shall be carefully unloaded and stored in yard or strung ahead of trenching in a manner that will not interfere with or endanger traffic, block gutters, or hinder the serviceability of streets or highways. Pipe shall be stored in a manner in which the pipes barrel will be kept clean.

Pipe shall be installed in accordance with the pipe manufacturer’s recommendations as well as any special requirements required by the engineers as shown on the drawings.

All eight (8) inch sewer lines shall terminate, discharging into manholes.

Trenches shall be constructed as shown on the drawings and specified herein. No more than 60 linear foot sections of pipe trench shall be opened at one time per pipe crew. Pipe must be installed straight and to grade with the use of lasers to be located in the bore of the pipe.

The contractor shall take the necessary measures to prevent inflow of mud and debris into the collection system during construction activities. All pipe shall be clean of dirt, grease, mud, and blisters, and shall be gently tapped with a hammer to sound for cracks. Pipe shall be thoroughly inspected and cleaned inside before lowering into trench and jointed.

Connections shall be made to sewers by replacing a length of pipe with branch fittings, or a clean opening cut with tapping equipment and a tee-saddle or teeinsert attached. Connections to deep sewers, trunk sewers, and manholes shall be made so as to prevent structural damage and infiltration. To meet future needs of properties, stubs, wyes, and tees may be installed and plugged tightly. Connections between pipes made of different materials shall be made with mechanical joint fittings and/or solid sleeves. No FERNCO type fittings will be allowed.

Pipe should be lowered into the trench with a rope sling or derrick, one joint at a time, so as to cause no damage to paint or coating, or to existing pipe or specials. Care should be taken to see that each spigot end of pipe enters cleanly into the bell and is shoved home, to the manufacturer's required depth, so that it will not come back out when released. Alignment shall be made so that a smooth, unobstructed interior will be secured. All jointing shall be in strict accordance with manufacturer's directions.

In cutting short lengths of pipe, use acceptable tools recommended for this type of work and see that care is observed in making the cut at right angles to centerline of pipe. The pipe shall then be beveled and placed home snug and resting solidly on its foundation.

When pipe-laying operations are terminated at the end of the day, or during the day, a pipe plug shall be placed in the end of the pipe to prevent dirt or other foreign material from entering the pipe barrel.

Provisions shall be made during non-working hours in order to insure protection and conformance to OSHA Standards. Simple measures such as boards or buckets

over the end of the line will not be allowed. The contractor must securely plug or cap the lines to prevent inflow.

200 a

The Contractor is to furnish all labor, equipment, tools, and machinery necessary to do all excavating of whatsoever kind, and all backfilling, restoring, and tamping necessary to obtain proper compaction.

Warning and Identification Tape

Composition of tape shall be polyethylene and have film thickness of four (4.0) mil nominal and a width of six (6) inches. The recommended location of the tape is 18–24 inches below the surface directly above the installation. Color shall be bright green with black printed letters on one side stating:

Caution Caution
Sewer Line Buried Below

Tape shall be Allen Markline as manufactured by Allen Systems or equal. This tape shall be installed in conjunction with sanitary sewers, including service connections.

200 b

Section 201.00

Polyvinyl Chloride (PVC) Pipe

PVC pipe shall be of standard strength to be used for the conveyance of sewage.

Joints

Joints shall be made by means of a rubber gasket system. The bell and the spigot of the pipe are cleaned to remove all dirt. The “O” ring is placed on the spigot approximately 1/2-inch from the end of the pipe. At this time, it is important to roll the gasket down the barrel of pipe and back into position to assure that the gasket is not twisted. Center spigot end of pipe at bell entrance and push together until it seats in the socket, lubricant is not required.

Joints made with pipe and fittings shall show no sign of leakage when tested in accordance with the section for Gasket Joints. The joint shall provide a positive seal against infiltration or exfiltration. All surfaces of the joint upon which the gasket may bear shall be smooth and free of such imperfections, fractures, or cracks that could adversely affect seal ability.

Installation shall in general be done in accordance with the recommendations of the manufacturer and in accordance with the recommended Practice for Underground Installation of Flexible Thermoplastic Pipe, ASTM Designation D232172.

This specification covers the requirements of poly (vinyl chloride) (PVC) gravity sewer pipe and fittings. The contents of this specification are based on ASTM D3034; modified to include the most advanced technical achievements concerning "Flexible Conduit Concept" and Gasket Jointing Systems.

Pipe and Fittings

Gravity sewer fittings for use with solid wall pipe shall meet the requirements of ASTM D3034. All PVC sewer pipefittings must utilize the bell and spigot concept with the utilization of a single sealing synthetic rubber gasket provided by the manufacturer.

All sewer main fittings shall meet the following requirements:

ASTM D3034 Fittings
ASTM D1784 Materials ASTM
D3212 Joints
ASTM F477

201

Sewer main fittings shall be made from PVC compounds as defined and described in ASTM designations ASTM D1784 for rigid PVC compounds.

All PVC fittings supplied shall have the following markings:

Manufacturer's name Nominal
size
Material designation
ASTM designation

PVC SDR35 fittings in sizes 4-inch through 8-inch shall be manufactured by the injection molded process. Fittings in sizes 10-inch through 36-inch shall be manufactured by the factory fabricated process.

The bell depth on the above-mentioned fittings shall be as specified per ASTM D3032, Section 6.2 and 7.3.2 for 4-inch through 8-inch and Section 7.11 for 10inch and larger, as shown in the following sizes:

4-inch	1.75-inch
6-inch	3.00-inch
8-inch	4.00-inch
10-inch	5.00-inch
12-inch	6.00-inch
15-inch	7.50-inch
18-inch	Manufacturer's Pipe Bell
21-inch	Manufacturer's Pipe Bell
24-inch	Manufacturer's Pipe Bell
30-inch	Manufacturer's Pipe Bell
36-inch	Manufacturer's Pipe Bell

Saddles shall be permitted only to connect services to existing main lines.

Fittings shall be installed in accordance with the manufacturer's recommendations.

Lubricant

The lubricant, if used for assembly, shall have no detrimental effect on the gasket or on the pipe.

Workmanship

The pipe and fittings shall be homogenous throughout and free from visible cracks, holes, foreign inclusions or other injurious defects.

The pipe shall be as uniform as commercially practical in color, opacity, density, and other physical properties

Fitting Dimensions

Fittings such as couplings, wyes, tees, adapters, etc. for use in laying PVC Gravity Sewer Pipe shall have dimensions as recommended by the manufacturer.

Flattening

There shall be no evidence of splitting, cracking, or breaking when the pipe is tested in accordance with Section on Test Methods under Flattening.

Extrusion Quality

The pipe shall not disintegrate or flake when tested in accordance with Section on Test Methods under Extrusion Quality. (Note: This test is intended only for use as a quality control test and not for use as a simulated service test.)

Section 202.00

SDR 50, SDR 35, SDR 26 PVC Solid Wall Gravity Sewer Pipe

Polyvinyl Chloride (PVC) Pipe

SDR 50 R 35 PVC solid wall gravity sewer pipe 4-inch through 36-inch SDR25 shall meet the following requirements:

Pipe shall have integral bell and spigot joints meeting ASTM F477. Spigots shall be factory beveled at approximately 15 degrees. Pipe stiffness shall be PS 46 with PVC compounds meeting ASTM D1784 with a cell class of 12454-B.

Standard laying length shall be 13 feet plus or minus 1-inch unless directed by the engineer. Each piece of pipe shall be marked with the nominal pipe size and manufacturer's name.

Sizes 4-inch through 36-inch shall meet ASTM D3034.

Sizes 18-inch through 36-inch shall meet ASTM F679.

Sizes 30-inch through 36-inch, the standard dimension ration, shall be based on Cast Iron outside diameters.

Vylon closed profile PVC gravity sewer pipe and fittings in sizes 36-inch through 54-inch shall be manufactured in accordance with the requirements of ASTM F1803 latest edition. PVC compounds shall meet the requirements of cell classification 12364A as defined by ASTM D1784.

All pipe joints shall be of the bell and spigot type with elastomeric seals and conform to the requirements of ASTM D3212. Gaskets shall be factory installed and chemically bonded to the bell end of the pipe. Gasket material shall conform to the requirements of ASTM F477.

The minimum pipe stiffness shall be 46 psi when tested in accordance with ASTM D2412. Impact resistance test shall be in accordance with D2444. Apart from structural voids and hollows associated with profile wall designs, the pipe and fittings shall be homogeneous throughout and free from visible cracks, holes, foreign inclusions and other injurious defects. Fusion quality testing shall be in accordance with ASTM D2152.

Each length of pipe shall be factory air tested at 3.5 psi as described in ASTM F1803.

202

Each length of pipe shall be factory marked with the following:

A) Manufacturers name
B) Nominal pipe size
C) Cell classification
D) ASTM F1803
E) Uni-Bell (Uni-B-9)
F) Pipe stiffness 46 psi

All fittings shall be fabricated from pipe meeting the requirements of these standards. Fusion heat welding shall reinforce fabricated miter joints. Saddles shall not be permitted.

Field installed gaskets, field cutting beveling, and manhole connections shall be done in accordance with the manufacturer's instructions and ASTM F1803

standards. The manufacturer shall provide adequate sealing material for sealing field cut exposed channels to prevent infiltration and exfiltration.

The manufacturer shall have manufactured each size pipe indicated on the drawings for a minimum period of five (5) years and shall furnish ten (10) references of installations of 3000' or more for each job.

Pipe shall be installed in accordance with the pipe manufacturer's recommendations as well as any special requirements required by the engineers as shown on the drawings.

Pipe Joints

The method of making joints and the material used shall be included in the specifications. Pipe joints not described by currently dated Federal, American Standards Association (ASA), American Water Works Association (AWWA), or

American Society for Testing Materials (ASTM) specification shall not be acceptable. Compression type joints are required.

The applicable specifications include:

Plastic (PVC)
ASTM D-3139 – Push-on Joints
PS-22-27 – For PVC Pipe

Allowable Sewer Pipe Leakage

Maximum allowable infiltration and exfiltration rates shall not exceed 200 gallons per inch diameter per mile per day for all types of pipe used on the system. See Table III, page 200-14 of these specifications.

Allowable Loss Rate
(Based on Loss Rate of 200 Gallons/Inch-Diameter/One Mile/24 Hours)

Pipe Size Inches mm	Loss Gal/Hour (L.F. of Pipe)
4-inch	.0063
6-inch	.0091

8-inch	.0120
10-inch	.0150
12-inch	.0180
15-inch	.0220
18-inch	.0270
21-inch	.0315
24-inch	.0360
27-inch	.0405

The infiltration test shall be made by installing a weir or other measuring device approved by the Engineer in the lower end of the sewer section to be tested. The incoming sewer or sewers in the upper end of the test section shall be securely sealed. The quantity of ground water infiltration into the test section shall be measured and shall not exceed the quantities mentioned above in the exfiltration test.

In the event the allowable leakage rates are exceeded, the Contractor shall determine the location where excess water is entering the sewer and/or manholes and shall repair the sewer and/or manholes in a manner satisfactory to the Engineer. The sewer line shall be retested until the leakage in the sewer is within the allowable limits.

Section 203.00

Inspection and Testing of PVC Pipe

Definitions

Purchaser – The person, firm, corporation, or government agency in a contract or agreement to purchase pipe according to this standard.

Manufacturer – The person, firm, or corporation that manufacturers the product.

Inspector – The authorized representative of the purchaser entrusted with the duty of inspecting pipe produced and witnessing tests performed under these standards.

Inspection – Careful examination of the pipe, and the tests performed on the pipe.

Poly-Vinyl Chloride Plastics – Thermoplastics made by combining Poly-Vinyl Chloride with colorants, fillers, stabilizers, lubricants, other polymers, and other

compounding ingredients (Note: Pipe compounds do not contain all of the mentioned modifiers). The abbreviation of Poly-Vinyl Chloride is PVC.

Dimension Ratio (DR) – The Dimension Ratio is the ratio of the average outside pipe diameter to the minimum wall thickness, SDR 35.

Physical Test Requirements

Sampling

The selection of the sample or samples of pipe shall be as agreed upon by the purchaser and manufacturer. In case of no prior agreement, any sample selected by the manufacturer shall be deemed adequate.

Test Methods:

Flattening

Flatten three specimens of pipe, 6 inches long between parallel plates in a suitable press until the distance between the plates is 40 percent of the outside diameter of the pipe. The rate of loading shall be uniform and such that the compression is completed within 2 to 5 minutes. Remove the load, and examine the specimens for splitting, cracking, or breaking.

Joints Performance Tests

A typical joint assembly shall be subjected to a test of both internal hydrostatic pressure and internal vacuum or external pressure. This is a qualifying test to confirm proper joint design and performance and is not to be used as a quality control or field performance test for each joint.

Internal Hydrostatic Pressure Tests

The assembly shall be subjected to an internal pressure of 25 feet of water or 10.8 pounds per square inch per gallon for 10 minutes without leakage.

Internal Vacuum or External Pressure Test

The assembly shall also be subjected to an internal vacuum of 2 inches of mercury or an external pressure of 10.8 pounds per square inch per gallon for 10 minutes without leakage.

Pipe in Concentric Alignment

The assembly in concentric alignment shall be subjected to the conditions of the internal hydrostatic pressure test and the internal vacuum or external pressure test.

Pipe in Angularly Deflected Position

After completing the pipe in concentric alignment test, the assembly shall be deflected angularly to the maximum amount recommended by the manufacturer and subjected to the conditions of the internal hydrostatic pressure test and the internal vacuum or external pressure test.

Deflection Testing

The maximum allowable deflection of the pipe in place shall be five (5) percent of the diameter. If excess deflection is found within the twelve-month guarantee period, the Contractor shall remove and replace the backfill to the satisfaction of the Owner and at the Contractor's expense.

The Contractor will be responsible for conducting deflection test at the direction of the Engineer. Tests will be conducted after the pipe has been in place for one 1) year. All testing will be done with a mandrel having an odd number of arms, typically nine (9). All mandrels shall be approved by the Engineer or District's personnel prior to use.

Certification

As the basis of the acceptance of the material, the manufacturer will furnish a certificate of conformance to these specifications upon request. When prior agreement is made in writing between the purchaser and the manufacturer, the manufacturer will furnish other conformance certification in the form of affidavit of conformance, test results, or copies of test reports.

Marking and Delivery

Pipe Marking

Each standard and random length of pipe in compliance with this standard shall be clearly marked per the following example at intervals of 1.5 meters, 5 feet, or less:

Manufacturer's Name or Trademark
Nominal Size
The PVC Cell Classification
The Legend "Type PSM DR 35 PVC Sewer Pipe"

Fittings Marking

The fittings in compliance with the standard shall be clearly marked per the following example:

Manufacturer's Name or Trademark
Nominal Size
The Material Designation "PVC"
PSM

Delivery

All pipe and couplings shall, unless otherwise specified, be prepared for standard commercial shipment.

Section 204.00

Ductile Iron Pipe

ANSI A21.11/AWWA C111 – Rubber Gasket Joints for Cast Iron and Ductile Iron Pressure Pipe and Fittings
ANSI A21.50/AWWA C150 – Thickness Design of Ductile Iron Pipe
ANSI A21.51/AWWA C151 – Ductile Iron Pipe, Centrifugally Cast in Metal Molds or Sand Lined Molds, for Water or Other Liquids

Federal Specifications WW-P-421c – Pipe, Cast Gray and Ductile Iron, Pressure (For Water or Other Liquid 3-inch thru 24-inch)

Minimum Wall Thickness CL50 Unless Otherwise Indicated on the Drawings.

Installation of ductile iron shall be in conformance with manufacturer's recommendations. The pipe shall be designed for 150-psi internal pressure and the external earth cover indicated on the drawings. Ductile iron pipe shall have a wall thickness of class 50 unless otherwise indicated on the drawings. Ductile iron pipe and fittings shall be cement mortar lined in accordance with ASA standard A21.4. Pipe and appurtenances thereto, shall be new materials of the quality, class, and type indicated. The interior of all pipe and fittings shall be thoroughly cleaned of all foreign material before being installed and shall be kept clean during construction operations by means of suitable plugs.

All pieces shall be carefully examined for defects, and no piece shall be laid which is knows to be defective. If any defective piece should be discovered after being laid, it shall be removed and replaced with a sound one in a satisfactory manner by the Contractor, at his own expense. The pipe when laid shall conform accurately to the line and grade designated on the drawings.

Pipe Joints

The method of making joints and the material used shall be included in the specifications. Pipe joints not described by currently dated Federal, American Standards Association (ASA), American Water Works Association (AWWA), or American Society for Testing Materials (ASTM) specification shall not be acceptable. Compression type joints are required.

The applicable specifications include:

Ductile Cast Iron
ANSI A21.11/AWWA C111 – Rubber Gasket Joints for Cast Iron and Ductile Iron Pressure Pipe and Fittings

Ductile Iron Pipe Joints

Push-on, flanged, and mechanical joints shall be used as designated by the Engineer. Approval of the joints and joining material shall be obtained from the Engineer prior to installation of any ductile iron pipe.

Flanged Ductile Iron Pipe

Flanged ductile iron pipe shall have flanges faced and frilled conforming to ASA Specification B16.1. Flanged fittings and specials shall conform to AWWA Standard C110.

Flanged Joints

Flanged joints shall be made in such a manner that no strain shall exist on the flanges of the completed joint. All gaskets shall be of full width and shall contact the full face of the flange. Care shall be taken in bolting flanged joints so that there is no restraint on the opposite end of the pipe or fitting which would cause unnecessary stress in the flange that should be free to move in any direction while the bolts are being tightened.

Flange bolts shall be tightened at a uniform rate in such a manner that uniform gasket compression is obtained. The flange bolts and nuts shall be made of the best quality refined iron or mild steel. Ring gaskets shall be used in all flanged joints.

Push-On-Joints

Push-On joints shall be of the compression type in accordance with WW-P-421 c. Type II, and shall be designed for assembly by repositioning a continuous molded synthetic rubber ring gasket in the pipe socket and pushing the spigot end of the entering pipe (suitable beveled into the socket), thereby placing the gasket under compression radially to the pipe to form a positive seal. The synthetic rubber gasket shall be suitable for use with raw sewage.

Mechanical Joint Pipe

Mechanical joint pipe shall conform to ASA Specification A21.11 latest revision Ductile iron pipefittings and specials shall conform to ASA Specification A21.11 latest revision.

Ductile Iron Pipe Fittings

Ductile iron pipefittings shall be Class 150 flanged fittings meeting ASA Specification B16.1, unless otherwise indicated on the drawings or approved by the Engineer.

Installation shall be done in accordance with the recommendation of the manufacturer, unless otherwise specified by the Engineer.

Section 205.00

Polyethylene Pipe

Polyethylene pipe shall conform to requirements of ASTM F 714, with SDR of 32.5. This pipe shall be listed by the National Sanitation Foundation. Joints shall be made by butt-fusion, with connections to dissimilar materials by stub ends and backing flanges or steel/HDPE transition couplings.

Section 206.00

River Crossing Pipe

River crossing pipe shall be ductile iron with a boltless flexible joint of the ball and socket type.

It shall be designed for, and rated at, a maximum water working pressure of 350 PSI.

Pipe shall be equal to the F-141 Boltless River Crossing Pipe manufactured by Clow Corporation.

Floatation of the lines shall be addressed in the design submitted to the District.

Joint

The river crossing joint shall be a push-on type ball and socket joint utilizing a first grade synthetic rubber gasket. The joint shall be capable of 15° full turning deflection without separation, leakage, or restriction of the pipe waterway. Joint restraint shall be provided by a boltless means that is locked against accidental disengagement of the restraining component.

All structural joint components (bell, ball, and retainer) shall be ductile iron meeting the physical requirements of ANSI Specification A21.10 (AWWA C110).

Pipe shall be furnished with the necessary gaskets, lubricant, and retainer locking accessories.

Pipe

Pipe shall have a centrifugally cast ductile iron barrel made in accordance with ANSI Specification A21.51 (AWWA C151).

Pipe shall be standard cement lined and seal coated with an approved bituminous seal coat in accordance with ANSI Specification A21.4 (AWWA C104). 206 Nominal pipe thickness shall be not less than the following:

Size	Nominal Thickness	A21.51 Class
6"	.40	55
8"	.42	55
10"	.44	55
12"	.46	55
14"	.51	56
16"	.52	56
18"	.53	56
20"	.54	56
24"	.56	56

Installation

Insofar as applicable, assembly and installation procedures shall conform to the manufacturer's recommendations.

All fittings used in the river crossing shall be either (1) ductile iron push-on restrained joint fittings, or (2) push-on or MJ ductile iron fittings with restraining devices.

PVC Yelomine sweep fittings shall be used for any bends required. Restraining devices shall be used to connect to MJ fittings.

Section 207.00

Testing Sewers for Leaks and Infiltration

Air Tests

An acceptance test for all gravity sewer lines will be air testing as follows:

All projects shall be air tested upon completion of installation. The engineer should designate the requirements for recording test results. Sections of sewer which fail to pass the tests shall have defects located and repaired or replaced and then be retested until within specified allowances.

The minimum time duration permitted for a prescribed low-pressure exfiltration pressure drop between two consecutive manholes shall not be less than that shown in Table 62, page 200-13. The prescribed drop shall not exceed 0.5 psi, from 3.5 to 3.0 psi, in excess of the ground water pressure above the top of the sewer. For determination of ground water pressure, take the average depth of line between manholes and divide by two (2) and the resulting figure will be used as the ground water pressure in feet of head. Divide the head in feet by 2.31 to obtain ground water pressure in psi. The minimum air test pressure shall be 5 psi regardless of ground conditions.

Table 62
Minimum Duration for Air Test
Pressure Drop

Pipe Size Inches	Pipe Size mm	Time Minutes
4	100	2.5
6	150	4

8	200	5
10	250	6.5
12	300	7.5
15	380	9.5
18	475	11.5
21	560	13.5
24	630	15
27	710	17

Verify with suppliers recommended practice.

207

Standard Specifications for Smoke Testing Sewers for Leaks And Infiltration

Smoke testing of new lines will only be allowed in areas as approved by the Engineer which cannot be subjected to pressure testing by air or water. The Contractor shall be fully and properly equipped for and conduct "smoke test" on all sewer lines to be constructed under this contract. The cost for smoke testing and stoppage of leaks and cleaning of sewer lines and manholes shall be included in the unit price bid for pipe and manholes. The Contractor shall furnish blowers, ducts, smoke bombs, smoke stops, smoke seals, other materials, and labor required for all types of tests.

Smoke Testing Equipment

The smoke testing blower shall have a capacity of at least 1,500 cfm. The smoke bombs shall produce a chemical reaction generating white to gray smoke, leaving no residue, and be nontoxic and non-explosive. Each bomb shall be capable of producing 25,000 cu. ft. of smoke per 3 minutes and shall be equal to those manufactured by the Superior Signal Co., Inc.; West Greystone Road, Spotswood, N.J.; or Hurco's Ripcord Smoker With Liquismoke.

Initial Testing

The first manhole-to-manhole section of sewer laid under this contract, for each size of pipe and type of joint, shall be given a smoke test prior to the sewer being backfilled. When the materials being used and the Contractor's installation methods have been proven satisfactory, the subsequent smoke testing required herein may, at the Engineer's option, be done after backfill has been placed, if so requested by the Contractor.

Subsequent Testing

The smoke test shall be applied to all sewers and laterals to be laid under this contract. The Contractor must perform air tests on line segments that do not have line service connections. Such testing shall be done while trenches are dewatered to bottom of pipe to be tested and immediately after completion of either the public sewer lines or laterals, in not more than two sections between manholes at a time. All defective work, as proved by the smoke test, shall be immediately repaired and retested until proven to be satisfactory.

Notification of Smoke Tests

The Contractor shall notify local fire departments and radio stations of the time and location of proposed smoke tests.

The Contractor shall inform the citizens of the area to be smoke tested by distributing a pre-printed form letter of explanation to each resident. The District, its employees, and representatives shall be held harmless of any events related to smoke testing. The Engineer shall be responsible for recording data in relation to the smoke tests.

Time of Smoke Test

The Contractor shall use at least one 5 minute or two 3 minute smoke bombs for a test length of 600-800 feet.

General Smoke Test Procedure

The Contractor shall plug off sewer line on upstream side of the manhole at the upper elevation of the test segment. The Contractor shall use sand bags to block the sewer line at the either end of the test segment. If the manhole covers and lids have not been placed on the manholes, then each end of the sewer line shall be covered with sand bags after smoke reaches each end of the test segment. The Contractor shall maintain sewage flow by pumping around test segments.

Video Inspections

For work involving replacement of existing, active sanitary sewer collection systems, and the new system is not put into service during the same work shift, no Exfiltration or Infiltration Tests will be required. TV inspection of the new pipes by the Engineer shall be used to determine the system acceptance.

The Engineer will make one complete TV inspection after all sewers have passed the specified water-tightness test. The Contractor shall be responsible for all costs associated with any TV inspection required.

Section 208.00

Tees and Wyes

Tee and Wye branches are allowed in gravity sanitary sewer lines per plans approved by the JCPSD. Unused branches of the tee or wye shall be capped per manufacturer's specifications. Wherever replacement of an existing sanitary sewer line is required, the method of connecting the existing service laterals to the new mainline shall be approved by the District prior to construction. Wyes shall not typically be permitted to connect two properties into a shared cleanout. Each property must have its own cleanout. Such situations warranting exception shall be presented to the JCPSD for approval.

Section 209.00

Service Laterals

Service laterals provide a connection from the developed property to the gravity wastewater line. Wastewater service laterals shall terminate with a cleanout at the property line unless otherwise directed. Service laterals require cleanouts spaced at intervals of a maximum distance of 50 feet. A cleanout must be provided 1836" beyond the outside wall of the structure being serviced.

Service lines shall be of four (4) inch diameter pipe for single family residences and six (6) inch diameter pipe for multi-family residences and commercial businesses in accordance with these specifications for polyvinyl chloride (PVC) pipe or ductile iron pipe (DIP). Townhouse units may be configured with twofour (4) inch diameter pipes tied into one-six (6) inch diameter pipe at the cleanout. Ductile iron pipe (DIP) shall be required wherever minimum clearances are not maintained.

Connections between pipes made of different materials shall be made with mechanical joint fittings and/or solid sleeves. No FERNCO type fittings will be allowed. Service laterals shall terminate with wye installed and plugged to allow air testing.
Service Laterals shall be installed at the minimum depth of 30 inches to top of pipe and maximum depth of 60 inches.

Vertical stacks/cleanouts shall be set to finished grade and be provided a threaded PVC or brass cap.

A minimum horizontal clearance of ten (10) feet and a minimum vertical clearance of eighteen (18) inches shall be maintained at all times of any existing or proposed waterline above the sanitary sewer service lateral. A minimum horizontal clearance of five (5) feet and minimum vertical clearance of eighteen (18) inches shall be maintained of all other utilities. In special cases, where this criteria cannot be met the sanitary sewer line shall be encased in concrete. The sanitary sewer pipe system shall maintain a minimum of 30 inches of cover from final grade. Service laterals shall not be installed under driveways.

Every effort must be made to connect the service lateral into the sewer main line pipe. Whenever service laterals must be connected to manholes, the standard drop across the manhole shall either be 0.1 foot for bends up to 45 degrees or

0.2 foot for bends between 45 degrees and 135 degrees and for bends over 135 degrees, a two (2) foot outside drop is required. All other service laterals connecting to the manhole at an elevation of two (2) feet or greater than that of the main line connection require an inside drop be brought down to the bench.

In developments where concrete curb is installed, the location of all wastewater service laterals shall be marked on the curb. Using a pipe saw or other suitable tool, a small "S" shall be ground into the curb adjacent to the wastewater service.

Sewer Collection System Specifications

Section 300

	Page
Section 300.00 – Sanitary Sewer Pipe Force Main	300
Section 301.00 – Ductile Iron Pipe And Fittings	301
Section 302.00 – High Density Polyethylene (HPDE) Pipe	302
Section 303.00 – Polyvinyl Chloride (PVC) Pipe	303
Section 304.00 – Plastic Water Pipe (Force Main Non-potable)	304
Section 305.00 – Yelomine PVC Pipe	305
Section 306.00 – Thrust Blocks	306
Section 307.00 – Hydrostatic Tests	307
Section 308.00 – Pressure Service Laterals	308

Section 300

Sanitary Sewer Pipe - Force Main

All pipes to be installed shall be either polyvinyl chloride (PVC), High Density Polyethylene (HDPE), or 350-psi ductile iron, unless noted otherwise.

Fittings for both polyvinyl chloride pipe and ductile iron pipe shall be Class 250 ANSI thickness, Class 350-psi ductile iron fittings.

Pipe Installation in Casings

The pipe must not rest on the joints.

The pipe must be braced and anchored in a manner that prevents movement in any direction.

The pipe must be installed in a manner that will permit it to be removed with reasonable ease.

Use APS Polyethylene Casing Spacers, Model CI, or equal approved by the JCPSD. Casing spacers shall be placed 4.5-foot on-center and one foot on both sides of each joint. Casing Spacers shall be placed on 8 foot spacing, including one foot on both sides of each joint for Ductile Iron Pipe. End seals shall be provided on the casing.

PVC Pressure Fittings

1-1/2 inch through 2-1/2 inch PVC pressure pipe fittings (SDR-21) shall be manufactured in one-piece injection molded PVC compounds complying with ASTM D-1784 specification. All fittings shall have an integral bell and gasket joint conforming to ASTM D-3139 and gaskets conforming to ASTM F-477. Only factory fabricated pressure fittings shall be permitted in those sizes not available in injection-molded types, and no field fabrication shall be permitted. All fittings shall have a minimum working pressure of 150-psi.

Ductile iron mechanical joint pipe (DIP) fittings, of 350-psi rating, shall be used on all PVC force main of all lines 3-inches and larger.

Pipe Installation

All sanitary sewer force mains and laterals shall maintain a minimum horizontal clearance of ten (10) feet and a minimum vertical clearance of eighteen (18) inches below any existing or proposed water main or lateral at all times.

A minimum horizontal clearance of five (5) feet and minimum vertical clearance of eighteen (18) inches shall be maintained of all other utilities.

In special cases, whereas these criteria cannot be met, the sanitary sewer line shall be encased in concrete. The force main sanitary sewer pipe system shall maintain a minimum of 42 inches of cover from final grade. Sewer mains and laterals shall never be installed at an elevation above the water main.

All pipe and specials shall be carefully unloaded and stored in yard or strung ahead of trenching in a manner that will not interfere with or endanger traffic, block gutters, or hinder the serviceability of streets or highways. Pipe shall be stored in a manner in which the pipes barrel will be kept clean.

All pipes shall be clean of dirt, grease, mud, and blisters, and shall be gently tapped with a hammer to sound for cracks. Pipe shall be thoroughly inspected and cleaned inside before lowering into trench and jointed.

Trenches shall generally follow straight lines, with pipe laid straight therein. Curves of large radius are frequently necessary, both horizontal and vertical, and can be made without special fittings. All abrupt changes of profile, all sharp bends, or turns will require specials, and these specials shall be furnished and laid by contractor for this material. There shall be no additional payment for materials and labor further than the lineal foot price measured on the centerline of said pipe; no allowance will be made for extra excavation where required to reach a proper profile where specials are not used. The trench walls should be straight with a minimum trench width of three (3) times the diameter of the pipe. The pipe shall be lowered into the trench one joint at a time.

Pipe should be lowered into the trench with a rope sling or derrick, one joint at a time, so as to cause no damage to paint or coating, or to existing pipe or specials. Care should be taken to see that each spigot end of pipe enters cleanly into the bell and is shoved tight so that it will not come back out when released. Alignment

shall be made so that a smooth, unobstructed interior will be secured. All jointing shall be in strict accordance with manufacturer's directions.

In cutting short lengths of pipe, use a cutter and see that care is observed in making the cut at right angles to centerline of pipe. Above everything, see that pipe is home solidly and resting solidly on its foundation.

When pipe-laying operations are terminated at the end of the day, or during the day, a pipe plug shall be placed in the end of the pipe to prevent dirt or other foreign material from entering the pipe barrel.

All sanitary sewer force mains shall terminate, discharging into manholes.

Warning and Identification Tape

Composition of tape shall be polyethylene and have film thickness of 4.0 mil nominal and a width of 6 inches. The recommended location of the tape is 18– 24 inches below the surface directly above the installation. Color shall be bright green with black printed letters on one side stating:

Caution Caution
Sewer Line Buried Below

Tape shall be Allen Markline as manufactured by Allen Systems or equal. This tape shall be installed in conjunction with sanitary sewers, including service connections.

Section 301.00

Ductile Iron Pipe and Fittings

All ductile iron pipe shall comply with all applicable requirements of ANSI/AWWA - C151/A21.51, centrifugally cast in metal molds or sand lined molds for water unless designated otherwise on the plans. Push joint or mechanical joint CL52.

Ductile Iron Mechanical Joint Fittings

Mechanical joint fittings in size 3-inch through 24-inch shall meet the requirements of AWWA C153.

Fittings shall be manufactured from a high strength, impact resistant ductile iron, having a minimum tensile of 70,000-psi with a minimum yield of 50,000-psi and a minimum elongation of 5%.

Fitting wall thickness shall be CL54 through 12-inch diameters and CL56 through 24-inch diameters.

Fittings shall be rated 350-psi.

Cement lining - All fittings shall be cement-lined in accordance with ANSI A21.4AWWA C111 latest revision.

Joint Accessories - All accessories, glands, bolts, and gaskets shall conform to ANSI A21.11 AWWA C111 latest revision.

Fittings shall be listed with Underwriters Laboratories.

Fittings shall be manufactured domestically or imported.

Where fittings are to be used with PVC piping systems, appropriate gaskets shall be furnished if required.

Fittings shall be as manufactured by Union Foundry, Typer Pipe or approved equal.

Restrained Push-On Joint Ductile Iron Pipe and Fittings

Pipe shall be centrifugally cast ductile iron manufactured in accordance with ANSI Specification A21.51 (AWWA C151). Pipe design and thickness selection shall comply with ANSI Specifications A21.50 and A21.51 (AWWA C151). Pipe shall be standard cement lined and seal coated in accordance with ANSI Specification A21.4 (AWWA C104).

The joint shall comply with ANSI Specification A21.11 for push-on joints. The joint shall be designed for water working pressure of 350-psi.

Field cutting will only be permitted for closure pieces, and then a specially designed setscrew lock ring shall be used.

Restrained push-on joint pipe and fittings shall be ductile iron with a boltless method of joint restraint that permits deflection after assembly and prevents disengagement. Joint design shall allow disassembly without damage to components. Pipe and fittings shall be furnished with all necessary gasket lubricant and locking accessories.
Restrained joint pipe and fittings shall be Super-Lock F-128 pipe and fittings manufactured by Clow Corporation or mechanical joint with mega lug style restraints.

Mechanical joint restraint for ductile iron fittings and pipe shall be incorporated in the design of the follower gland. Said gland shall include a restraining mechanism that, when actuated, imparts multiple wedging action against the pipe that increases its resistance as pressure increases.

Glands shall be designed to allow flexibility of pipe joints after installation and backfill.
Glands shall be manufactured of ductile iron, conforming to ASTM A536-80.

Restraining devices shall be of ductile iron, heat-treated to a minimum hardness of 370 BHN.

Dimensions of gland shall be such that it can be used with the standardized mechanical joint bell with tee-head bolts conforming to ANSI/AWWA A21-11, and ANSI/AWWA C153/A21.53 latest revision.

The design shall incorporate twist-off nuts to insure proper torque upon installation, leaving hex head nut for disassembly if required.

The mechanical joint restraining device in sizes 3-inch through 16-inch shall have a working pressure of 350-psi, with a safety factor of two to one.

In sizes, 18-inch through 48-inch the working pressure shall be of the same class rating for the pipe and the fittings with a two to one safety factor.

Glands shall have U.L. listing through 24-inch in size, and Factory Mutual approval through 12-inch.

Restraining glands shall be as manufactured by EBAA IRON Mega lugs, 1100 series, or Ford Uni-flange equal.

Mechanical joint restraint for PVC pipe, using mechanical joint fittings, shall be incorporated in the design of the follower gland.

The restraint mechanism shall consist of a plurality of individually activated gripping surfaces to maximize restraint capability.

Glands shall be manufactured of ductile iron conforming to ASTM A536-80.

Dimensions of the glands shall be such that it can be used with standardized mechanical joint bell and tee head bolts conforming to ANSI/AWWA A21.11/C111 and ANSI AWWA A21.53/C153 of latest revision.

The design shall incorporate twist-off nuts to insure proper torque upon installation, leaving hex head nut for disassembly if required.

The mechanical joint restraining device in sizes 4-inch through 14-inch shall have a working pressure of 150-psi with a two to one safety factory.

In sizes 16-inch through 24-inch the working pressure shall be 100-psi with a two to one safety factor.

Restraining glands shall have a pressure rating equal to that of the P.V.C. pipe on which it is used and shall be EBAA Iron, Inc., Mega Lug 2000 or 1100 Series, or Ford Uni-Flange equal.

Ductile Iron Pipe Laying

Installation of ductile iron shall be in conformance with manufacturer's recommendations. Horizontal and vertical curvature, where fittings are not specified, may be obtained by cutting pipe to short lengths. Kinks or sharp bends giving excessive deflection or which puts pipe joints in strain will not be permitted. The following tables show the maximum permissible deflections for various types of joints or pipe.

MAXIMUM PERMISSIBLE DEFLECTION PER JOINT

MECHANICAL JOINT PIPE (18 foot joint)

Pipe Diameter (inches)	Maximum Deflection (inches)	Pipe Diameter (inches)	Maximum Deflection (inches)
2	31	12	20
3	31	14	13.5
4	31	16	13.5
6	27	18	11
8	20	20	11
10	20	24	9

PUSH ON TYPE JOINT

Pipe Diameter (inches)	Maximum Deflection (inches)
4 thru 12	19
14 thru 16	15
18 thru 24	11

Section 302.00
High Density Polyethylene (HDPE) Pipe

High Density Polyethylene (HDPE) pipe shall conform to ASTM D 3550 designation PE 3407 or PE 3408. The pipe shall have a minimum pressure rating of 100 pounds per square inch and a maximum Standard Dimension Ratio (SDR) of 17.0. All HDPE pipe shall have a standard iron pipe size (IPS) outside diameter.

The pipe shall be homogeneous throughout and free of visible cracks, holes, foreign inclusions, or other injurious defects. The pipe shall be uniform in color, opacity, density, and other physical properties.

HDPE pipe shall have an ASTM D-3350 material Cell Classification of no less than 335434C.

The pipe shall be marked at five-foot intervals with a coded number which identifies the manufacturer, SDR size, PPI rating, manufacturing standard reference and production code from which data and place of manufacturer can be determined.

When HDPE pipe is connected to ductile iron pipe, a flange adapter shall be used. A flange-coupling adapter shall be used on the ductile iron pipe. HDPE flange adapters shall be manufactured by the same manufacturer as the pipe using the same resin as the pipe. Each flange adapter shall be furnished with a ductile iron convoluted back-up ring drilled to match the standard ANSI bolt pattern for the nominal diameter of pipe used.

Connection of the pipe and fittings shall be performed by the thermal butt fusion system. HPDE pipe lengths, fittings, and flange adapter connections to be fused shall be of the same type, grade and class of polyethylene compound and supplied by the same raw material supplier.

301 d

January 21, 2016

Section 303.00

Polyvinyl Chloride (PVC) Pipe

PVC Pipe Laying

Installation of PVC pipe shall in general be done in accordance with the recommendations of the manufacturer and in accordance with the "Recommended Practice for the Installation of Polyvinyl Chloride (PVC) Pressure Pipe" as published by Uni-Bell Corporation.

Due to the high coefficient of thermal expansion, sufficient allowance should be provided for expansion and contraction. For this reason, it is extremely important to backfill during the early morning hours during hot weather. If this is not possible, the pipe should be filled with water before the trench is backfilled. When the temperature of the pipe is 70° F, the pipe shall be laid with enough "snake" in the pipeline to provide for one inch of contraction for each ten feet of pipeline. For each 10° F the temperature is above 70° F; the allowance for contraction shall be increased one-fourth inch per ten feet of pipeline. The "snaking" of the pipeline may be vertical in installations where the trench is narrow.

In such installations, the trench may be over excavated in an amount so that the required contraction may be provided.

Maximum Allowable Longitudinal Bending (PVC Pipe)

Offset per 20 foot length

Pipe Size	PVC Pipe ASTM D 2214	PVC Pipe C-909
2"	56"	---
3"	42"	---
4"	31"	23"
6"	22"	16"
8"	17"	12"
10"	13"	9"
12"	11"	8"

304.00

Plastic Water Pipe (Force Main Non-potable)

PVC Pressure Pipe: SDR 21 CL 200

PVC Pressure pipe shall be manufactured to steel pipe size (IPS) outside dimensions with DR's and tolerances in compliance with ASTM D2241 PVC Plastic Pipe, DR, and PR.

Pipe shall be manufactured to steel pipe O.D.'s (IPS) in sizes 1-1/2" and greater. Pipe shall be joined by the means of a rubber ring bell joint, which shall be an integral and homogeneous part of the pipe.

Pipe shall conform to all requirements of ASTM D2214 for PVC pipe.

Pressure ratings and class shall be as indicated on drawings. If drawings do not show class, the highest class shall be required.

Pipe shall have a two to one safety factor with class and SDR's as follows:

1-1/2" and greater SDR 21 200 PSI

When used for potable water systems, pipe shall bear the N.S.F. seal.

The following ASTM's shall be required:

ASTM D1784 PVC Compound
ASTM D2214 PVC Standard Specifications
ASTM D3139 Joints for PVC Pressure Pipe UNI-B-1
Thermoplastic Pipe Joints

Certifications of compliance of the above specifications shall be required from the manufacturer before acceptance of delivery or award of contract.

Section 305.00

Yelomine PVC Pipe

Yelomine PVC Pipe is made from a special formulation of Polyvinyl Chloride, Type 1, Grade 1, 2000 PSI design stress material, Class 12454B in accordance with ASTM D-1784.

Yelomine shall meet all PVC Pipe requirements specified in the ASTM Standard Specification D2241 for Polyvinyl Chloride Plastic Pipe, (pressure rated SDR pipe).

Yelomine Certa-Lok joints shall meet ASTM D3139, Joints for Plastic Pressure Pipes Using Flexible Elastomeric Seals.

Rubber rings shall meet ASTM F477, Standard Specification for Elastomeric Seals (Gaskets) for Joining PVC Pipe.

2" through 3" SDR 17 250 P.S.I.

Section 306.00

Thrust Blocks

Thrust blocks should be placed at all sharp bends, wyes, tees, and steep slopes as directed by the Engineer. Thrust block details are shown on the plans. Size of thrust blocks shall conform to the suggested manufacturer's recommendations for size and class of pipe. It is the responsibility of the Contractor to verify the sizing of the thrust blocks.

Concrete for thrust blocks shall have a minimum compressive strength of 3000 PSI at 28 days and conform to the requirements of ASTM C 94. In addition to the thrust blocks, the Contractor shall install Series 1300/Series 1390 Uni-Flange Restraining devices, or equal, on each fitting installed.

Minimum Size of Thrust Blocks for Horizontal Bends (Square Feet on solid bearing surfaces)

Pipe Size	Test Pressure (PSI)	11-1/4° and 22-1/2° Elbows	45° Elbow	90° Elbow	Dead End, Tee or in Line Valve
4	3	less 350	2	3	5
4" or 6"	250	2	4	7	5
6"	350	3	6	10	7
8"	250	4	7	12	9
8"	350	5	10	17	12

Thrust block areas are computed based on a soil bearing strength of 2000 lbs. per square foot. The contractor shall verify the soil bearing strength. If the actual soil bearing strength is less than 2000 lbs. per square feet, then the size of the thrust blocks shall be increased accordingly.

Minimum Pounds of Thrust on Vertical Bends

Pipe Size	Test Pressure (PSI)	11-1/4° and 22-1/2° Elbows	45° Elbow	90° Elbow	Dead End, Tee or in Line Valve

4" or less	250	1,750	3,750	6,750	4,750
	350	2,450	5,250	9,450	6,650
6"	250	3,750	7,500	13,750	9,750
6"	350	5,250	10,500	19,250	13,650
8"	250	6,500	13,500	23,500	16,750
8"	350	9,100	18,900	32,900	23,450

The dead weight of concrete thrust blocks shall be used to restrain the pounds of thrust on the vertical bends. The bends shall be strapped to the thrust block with steel bands embedded in the concrete.

Alternative restraining systems will be considered where standard thrust blocking is not suitable. The contractor shall provide adequate details of the restraining system to the engineer for review.

MINIMUM POUNDS OF SIDE THRUST PER DEGREE OF DEFLECTION

Pipe Size	Test Pressure (PSI)	Side Thrust
4" or less	250	90
	350	130
6"	250	180
6"	350	260
8"	250	305
8"	350	430

Concrete thrust blocks for side thrust in curves shall be provided on each side of the coupling where (1) unstable soil conditions exist, (2) the soil is not properly tamped, (3) the undistributed ditch wall is more than 12" from the pipe or (4) directed by the engineer.

Section 307.00

Hydrostatic Tests

Testing of Force Mains

Where any section of the main is provided with concrete thrust blocking, the hydrostatic pressure test shall not be made until at least seven (7) days after the concrete is placed. Each completed section of pipeline shall be plugged at both ends. After the main has been slowly filled with water in preparation for the hydrostatic pressure test, all air shall be expelled from the pipe. If air release valves are not available at high places, the Contractor shall make the necessary taps at points of highest elevation, insert the necessary corporation stops, and copper service line in order that the air may be expelled.

The main shall be subjected to hydrostatic test pressure, indicated on the plans, for a period of two (2) hours. Pressure shall be applied to the main by means of a hydrostatic test pump.

During the duration of the test, the lines shall be thoroughly examined for leakage. "Make-up" water shall be measured with a displacement meter. Any cracked or defective pipes, fittings, or valves discovered in consequence of the pressure test shall be removed and replaced by the Contractor at his own expense. After replacing or correcting cracked or defective pipe fittings or valves discovered in the test, or correcting any leakage, the Contractor shall retest the pipe.

The allowable leakage for a period of two (2) hours shall be as shown in the Table 670.3.2.6, page 100-23. In the event the pipe line is tested in sections and temporary thrust blocking is required, a temporary plug or cap shall be installed and blocked with a screw jack firmly braced against the end of the trench or against a heavy timber embedded into the side of the trench.

The contractor shall provide all necessary equipment and shall perform all work required in connection with the tests.

Each section of pipe between gate valves shall be tested individually. Testing through an open gate valve shall not be allowed.

Where any section of the pipe is provided with concrete thrust blocking, the hydrostatic pressure test shall not be made until at least seven (7) days after the concrete is placed.

Each completed section of main pipeline shall be flushed clean prior to testing the water main. After flushing, each completed section of main pipe shall be isolated by valves and hydrostatically tested for leaks.

After the main has been slowly filled with water in preparation for the hydrostatic pressure and leakage test, all air shall be expelled from the pipe. If fire hydrants or blow-offs are not available at high places, the contractor shall make the necessary taps at points of highest elevation and insert the necessary corporation stops and copper service line in order that the air may be expelled.

The pipe shall be subjected to a 2-hour hydrostatic test at; a) a pressure of 150% of the design operating pressure or b) the pipe pressure rating plus 50 PSI, whichever is greater. The required pressure shall be applied at the point of lowest elevation on each section. All pipes, fittings, valves, hydrants, and joints shall be carefully examined for defects.

Pressure shall be applied to the main by means of a hand pump for small lines. During the duration of the test, the lines shall be thoroughly examined for leakage at the points and elimination of leakage affected where necessary. "Make up" water shall be measured with a displacement meter.

Any cracked or defective pipes, fittings, or valves discovered in consequence of the pressure test shall be removed and replaced by the contractor at his own expense. After replacing or correcting cracked or defective pipe fittings or valves discovered in the test or correcting any leakage, the contractor shall retest the pipe.

The allowable leakage on the completed waterline shall not exceed 10 gallons per inch diameter per mile of pipe per 24 hours for each pipe segment being tested. See the following Table for the allowable leakage for different pipe sizes for a 2hour test.

January 21, 2016

Allowable Leakage
(Based on 2 hour test)

Pipe Size (Inches)	Allowable leakage Per 1,000 feet (gallons)
2	0.31
3	0.47
4	0.63
6	0.94
8	1.26
10	1.57
12	1.89
14	2.21
16	2.52

TABLE 670.3.2.6 – LEAKAGE ALLOWANCE
GALLONS PER 100 JOINTS PER HOUR
SIZE OF PIPE, INCHES

Test Pressure	2”	2-1/4”	4”	6”	8”	12”
50	0.76	0.86	1.153	2.29	3.04	4.56
60	0.83	0.94	1.67	2.51	3.32	4.98
70	0.90	1.02	1.81	2.71	3.60	5.40
80	0.96	1.09	1.92	2.90	3.84	5.76
90	1.02	1.15	2.05	3.08	4.08	6.12
100	1.08	1.22	2.16	3.24	4.32	6.48
110	1.13	1.28	2.27	3.40	--	--
120	1.18	1.33	2.37	3.55	--	--
130	1.25	1.39	2.47	3.70	--	--
140	1.28	1.44	2.56	3.84	--	--

150	1.33	1.49	2.65	3.97	--	--
160	1.37	1.54	2.73	4.10	--	--
170	1.41	1.58	2.82	4.23	--	--
180	1.45	1.63	2.90	4.35	--	--
190	1.49	1.68	2.98	4.47	--	--
200	1.53	1.72	3.07	4.60	--	--
225	1.62	1.82	3.25	4.88	--	--
250	1.71	1.92	3.42	5.13	--	--
275	1.87	2.11	3.75	5.62	--	--
300	1.87	2.11	3.75	5.62	--	--

All leakage tests shall be conducted under the supervision of the engineer or his representative.

Section 308.00

Pressure Service Laterals

Service laterals connecting into a force main are most often discouraged or not permitted. However, there are situations whereas any other alternative is cost prohibitive. Therefore, these connections are permitted on individual case-bycase evaluations. Whereas a service lateral connection is permitted to discharge into a force main all criteria, including the size of the grinder pump (Section 500), must be strictly adhered to. Refer to JCPSD Standard Nos. S-25 and S-26.

Sewer Collection System Specifications

Section 400

	Page
Section 400 – Structures	400
Section 401.00 – Manholes	401
Section 402.00 – Precast Concrete Manholes	402
Section 403.00 – Testing Manholes for Leaks and Infiltration	403
Section 404.00 – Concrete Anchors	404
Section 405.00 – Cleanouts	405
Section 406.00 – Grease Interceptor	406
Section 406.10 – Sizing of Grease Interceptors	406.1
Section 407.00 – Air Relief Valves Combination	407

Section 400

Structures

Refer to JCPSD Standards, Appendix D.

All materials incidental to the construction of the specific structure shall comply with the latest WVDOH specifications, unless otherwise stated.

Section 401.00

Manholes

The Contractor is to furnish completely installed in place, manholes, covers, and frames complete with steps, all from JCPSD pre-approved sources, in accordance to JCPSD Standards.

JCPSD has approved the following manhole frames and covers for use on all manholes; #MH-1678*JC-WT from Capitol Foundry of VA, Inc. and product number 00104509 from East Jordan Iron Works. These are the only approved manhole frames and covers acceptable by the JCPSD and therefore shall be the only manhole frames and covers installed for all projects unless approved in writing by the General Manager. See detail drawings in Appendix B.

The cover is to be free from imperfections, and have a continuous and even bearing on the frame and be properly set to avoid rocking. The cover shall be bolted to the frame.

All manhole rings will be bolted to the manhole by four (4) stainless steel bolts. The bolts will be no less than one-half inch (1/2") in diameter and shall extend through any grade adjusting rings into the top of the manhole cone or flat top section.

Manholes shall be installed at the end of each line of eight-inch diameter or greater; at all changes in grade, size, or alignment; at all intersections; and at distance not greater than 400 feet for sewers 15 inches or less and 500 feet for sewers 18 inches to 30 inches. Terminal cleanouts may be acceptable on lines less than eight inches in diameter in lieu of manholes on a case-by-case basis. Slightly greater spacing may be permitted in larger sewers and in those carrying a settled effluent.

Manholes shall be constructed of materials that will maintain the structural integrity throughout the design life of the sewer. Manhole walls, top, and bottom construction shall be such as to ensure watertightness. Contractor will supply Engineer with the manhole design for approval.
The minimum base inside diameter of manholes shall be 48 inches. The minimum clear opening in the manhole frame shall be 24 inches. Larger base diameters are preferred. All manholes which accommodate pipe larger than 15 inches diameter shall have an inside diameter of 72 inches minimum.

The manhole foundation shall be adequately designed to support the manhole and any superimposed loads that may occur. Contractor will supply Engineer with shop drawings of the proposed foundation for approval.
The flow channel through manholes shall be of such shape and slope to provide smooth transition between inlet and outlet sewers and to reduce turbulence. Concrete benches shall be sloped to the channel to prevent accumulation of solids. The drop across the manhole will be 0.10 feet minimum for bends up to 45 degrees and 0.20 foot for bends between 45 and 90 degrees. An outside drop of 2 feet is required for bends of over 90 degrees.

Line connections directly to the manhole or to short stubs integral with the manhole shall be made with flexible joints. Flexible joints are joints that permit the manhole to settle without destroying the watertight integrity of the line connections.

401

Ventilation of gravity sewer systems shall be provided where continuous watertight sections greater than 1,000 feet in length are incurred, as directed by the Engineer. House vents shall be acceptable. Special vents may be required in open areas. (See typical manhole plan sheet.)

A drop pipe must be provided for a sewer entering a manhole at an elevation of 24 inches or more above the manhole invert or as may otherwise be required to

conform to the use of standard fittings in the dropping construction. No inside drops will be allowed over 2 foot in height.

Manhole steps shall be Uni-step of M.A. Industries, Inc. or equal as approved by JCPSD, consisting of grade 60 steel reinforcement surrounded with a copolymer polypropylene plastic. Dimensions shown on the drawings are to be built into the concrete as shown on the drawings.

All steps within manholes are to be of uniform size and placed such that all steps are vertically in line.

Section 402.00

Precast Concrete Manholes

The design of all precast concrete manholes shall conform to ACI 318-95, Chapter 16, and all other applicable chapters.

All precast concrete manholes shall be 4'-0" or 6'-0" diameter, with 5" and 7.08" thick walls, respectively.

Manhole bottoms shall be steel-trowel finished.

Frames and covers shall be approved Capitol Foundry of Virginia MH-1678*JCWT or East Jordon product number 00104509. The manhole rim shall be a minimum 24” opening, the diameter shall be 48-inches, 72-inches, or as shown on standard drawing.

Portland cement shall conform to ASTM C-150, Type III, and concrete shall develop a minimum strength of 3,000 p.s.i. at 28 days.

The maximum size of aggregate shall not be larger than one-third of the least dimension of the wall member.

Metal reinforcement shall be billet-steel, intermediate or hard grade, ASTM A-15.

Joint sealant shall be plastic cement putty type conforming to Federal Specification SS-C-153 or o-rings.

The precast concrete manhole sections shall be fabricated in forms in which horizontal alignment is maintained and which provide a variation of plus or minus 1/4-inch in the diameter of any member.

The concrete shall be internally vibrated and shall have a consistency such that complete bond to the reinforcement is obtained.

Opening locations shall be subject to the Contract Documents and Plans.

The precast concrete manhole sections shall be handled by inserts or other means which will permit them to be lifted and transported without incurring structural damage.

Buried manholes being replaced will be raised to existing ground elevations.

Maximum allowable distance between manholes shall be 300 linear feet.

Section 403.00
Testing Manholes for Leaks and Infiltration

A minimum of 25% of the total amount of manholes installed are to be tested as directed by the Engineer. Further testing will be required if the initial tests results warrant.

Vacuum Testing

Vacuum testing of manholes shall be considered as an alternative to water testing. Vacuum testing shall be performed as follows:

1) All pipes entering the manhole shall be plugged, taking care to securely brace the plugs from being drawn into the manhole.

2) The test head shall be placed at the inside of the top of the cone section and the seal inflated in accordance with the manufacturer's recommendation.

3) A vacuum of 10 inches of mercury shall be drawn and the vacuum pump shut off. With the valves closed, the time shall be measured for the vacuum to drop to nine inches. The manhole shall pass if the time is greater than 60 seconds for a 48" diameter manhole, 75 seconds for a 60" diameter manhole, and 90 seconds for a 72" diameter manhole.

4) If the manhole fails the initial test, necessary repairs shall be made with a non-shrink grout. Retesting shall proceed until a satisfactory test is obtained.

Section 404.00

Concrete Anchors

Concrete anchors, JCPSD Standard S-14, shall be provided for sewer lines laid on slopes of 20% or greater and equally spaced as follows:

Not over 36 feet center to center of anchors on slopes between 20% and 35%.

Not over 24 feet center to center of anchors on slopes between 35% and 50%.

Not over 16 feet center to center of anchors on slopes and over.

Section 405.00

Cleanouts

Wastewater service laterals shall terminate with a cleanout at the property line unless otherwise directed. Service laterals require cleanouts at intervals spaced at a minimum of 50 feet as well as a cleanout being located 18-36" beyond the outside wall of the structure being serviced. Cleanouts shall be of four (4) inch diameter pipe in accordance with the specifications for polyvinyl chloride (PVC) pipe or ductile iron pipe (DIP). Ductile iron pipe (DIP) shall be required wherever minimum clearances are not maintained. Connections between pipes made of different materials shall be made with mechanical joint fittings and/or solid sleeves. No FERNCO type fittings will be allowed.

Service Laterals shall be installed at the minimum depth of 30 inches to top of pipe. Cleanouts shall be set to finished grade and be provided a threaded PVC or brass cap. Brass cleanout plugs shall be utilized with metallic drain, waste and vent piping only, and shall conform to ASTM A74, ASME A112.3.1 or ASME A112.36.2. Plastic cleanout plugs shall conform to the requirements of Section 702.4. Plugs shall have raised square or countersunk square heads.
Countersunk heads shall be installed where raised heads are trip hazard.

Section 406.00

Grease Interceptor

Any and all commercial establishments dealing with food preparation, automotive/mechanical repairs, or any business handling grease by-products shall install an adequately sized grease interceptor to remove grease from the wastewater stream prior to discharging into the public sanitary sewer system. A separate line from kitchen facilities, wash-up areas, and floor drains shall be piped into the grease interceptor. This interceptor shall comply with WVBPH standards.

Plumbing plans must be submitted to and approved by the JCPSD before construction begins. Refer to the JCPSD Sewer Use Ordinance for sizing of grease traps based on loading in accordance with the Uniform Plumbing Code, Appendix H. The Uniform Plumbing Code includes a built-in safety factor that can yield very large grease trap size specifications. At this time, the District is not requiring traps larger than 4000 gallons. However, the decision to use a trap smaller than that specified by the formula and calculations above is to be addressed in the plan submission. The minimum required grease trap shall be of 1,000-gallon capacity.

Should damages be done to wastewater lines due to improper maintenance of the grease interceptor, the JCPSD shall recover all costs incurred from the property owner for repairs and/or replacement to the wastewater lines and appurtenances.

Section 406.10

Sizing Grease Interceptors

Sizing of Grease traps shall be based on loading in accordance with the Uniform Plumbing Code, Appendix H, but in no case shall they be smaller than 150 gallons in capacity.

Number of Meals Per Peak Hour	X	Waste flow Rate	X	Retention Time	X	Storage Factor	=	Size Requirement Liquid Capacity
Step 1		Step 2		Step 3		Step 4		Step 5

Steps:

1) Number of meals served at peak operating hour: Seating Capacity x Peak Factor

a. Where Peak Factor for Fast Food Restaurant is..... 1.33

b. And, Peak Factor for all other food service types is 1.00

2) Waste Flow Rate:

a. With Dishwasher..... 6-gallon flow

b. Without Dishwasher..... 5-gallon flow

c. Single Service kitchen..... 2-gallon flow

d. Food waste disposer..... 1-gallon flow

3) Retention Times

a. Commercial kitchen waste/dishwasher..... 2.5 hours

b. Single service kitchen/single serving..... 1.5 hours

4) Storage Factors

a. Fully equipped commercial kitchen (8 hr operation) 1

b. Fully equipped commercial kitchen (16 hr operation) 2

c. Fully equipped commercial kitchen (24 hr operation) 3

d. Single Service Kitchen 1.5

The Uniform Plumbing code includes a built-in safety factor that can yield very large grease trap size specifications. At this time, the District is not requiring traps larger than 4000 gallons. However, the decision to use a trap smaller than that specified by the formula and calculations above is to be addressed in the plan submission.

Section 407.00

Air Relief Valves Combination

The Contractor shall provide air valves as shown on the Contract Drawings. Use sewage air and vacuum release valve Val-Matic Company, Model302BW (backwash) or equal.

Section 500

		Page
Section 500	- Pressure Grinder Pump Systems	500
Section 501.00	- Tank and Integral Accessway	501

Section 500

Pressure Grind Pump Systems

The grinder pump station(s) shall be completely factory built and tested; each consisting of a grinder pump suitably mounted in a fiberglass basin, pump removal system, shut-off valve, anti-siphon valve, check valve assembled within the basin, remote electrical alarm/disconnect panel, and all necessary wiring and controls. The pump(s) shall be semi-positive displacement type grinder pump(s). For ease of serviceability, all pump motor/grinder units shall be of like type and horsepower throughout the system.

Shop Drawings

After receipt of notice to proceed, a minimum of six (6) sets of shop drawings detailing the equipment to be furnished including dimensional data and materials of construction shall be supplied to the District. The District shall promptly review this data, and return two (2) copies as accepted or with requested modifications. Upon receipt of the approved shop drawings, the fabrication of the equipment shall proceed immediately.

Manufacturer

The equipment specified shall be a product of a company experienced in the design and manufacture of grinder pumps for specific use in low-pressure sewage systems. The company shall submit detailed installation and user instructions for its products, submit evidence of an established service program including complete parts and service manuals, and be responsible for maintaining a continuing inventory of grinder pump replacement parts. E-One, Fidelity Engineering, or equal shall supply the equipment.

Warranty

The grinder pump station(s), including alarm/disconnect panel(s), shall be warranted from any defect in material and/or factory workmanship for a period of twenty-four (24) months from date of installation or twenty-seven (27) months from date of shipment, whichever occurs first, provided the product is installed,

serviced, or operated under normal conditions according to the manufacturer's instructions. Repair or parts replacement required as a result of such defect will be made free of charge during this period upon return of the defective parts or equipment to the manufacturer or it's nearest authorized service center.

500

Operating Conditions

The pump(s) shall be capable of delivering 11 GPM against a total dynamic head of 92 feet (40 psig) and 8 GPM at 138 feet (60 psig). The pump(s) must also be able to operate at negative heads without overloading the motor(s). Under no conditions shall in-line piping or valving be allowed to create an apparent head.

Pump

The pump shall be a custom designed, integral, vertical rotor, motor driven, solids handling pump for the progressing cavity type with mechanical seal. The rotor shall be thoroughly hardened, highly polished, precipitation hardened stainless steel. The stator shall be of a specifically compounded ethylene propylene synthetic elastomer. The material shall be suited for domestic wastewater service. Its physical properties shall include high tear and abrasion resistance, grease resistance, water and detergent resistance, temperature stability, good aging properties, and outstanding wear resistance.

Grinder

The grinder shall be placed immediately below the pumping element and shall be direct-driven by a single, one-piece motor shaft. The grinder impeller assembly shall be securely fastened to the pump motor shaft. The grinder will be of the rotating type with a stationary hardened and ground chrome steel shredding ring spaced in an accurate close annular alignment of the driven impeller assembly, which shall carry two hardened type 400 series stainless steel cutter bars. This assembly shall be balanced and operate without objectionable noise or vibration over the entire range of recommended operating pressures. The grinder shall be constructed so as to eliminate clogging and jamming under all normal operating

conditions including starting. Sufficient vortex action shall be crated to scour tank free of deposits or sludge banks that would impair the operation of the pump.

These requirements shall be accomplished by the following, in conjunction with the pump:

1. The grinder shall be positioned in such a way that solids are fed in an upward flow direction.
2. The inlet shroud shall have a diameter no less than 5 inches.
3. At maximum flow the average inlet velocity must not exceed 0.2 ft. per second.
4. The impeller mechanism must rotate a nominal speed of no greater than 1800 RPM.

The grinder shall be capable of reducing all components in normal domestic sewage, including a reasonable amount of "foreign objects", such as paper, wood, plastic, glass, rubber, and the links, to fine particles which will pass freely through the passages of the pump and the 1-1/4" diameter discharge piping.

Electric Motor

As a minimum, the motor shall be a 1 HP, 1725 RPM, 240 volt, 60 hertz, 1 phase, capacitor start, ball bearing, squirrel cage induction type with a low starting current not to exceed 30 amperes and high starting torque of 8.4 foot pounds. Inherent protection against running overloads or locked rotor conditions for the pump motor shall be provided by the use of an automatic reset, integral thermal overload protector incorporated into the motor. The motor protector combination shall have been specifically investigated and listed by Underwriters Laboratories, Inc. for the application.

Mechanical Seal

The core shall be provided with a mechanical shaft seal to prevent leakage between the motor and pump. The seal shall have a stationary ceramic seat and carbon rotating surface with faces precision lapped and held in position by a stainless steel springs.

Check Valve

The pump discharge shall be equipped with a factory installed, gravity operated, flapper-type integral check valve built into the stainless steel discharge piping. The check valve will provide a full-ported passageway when open, and shall introduce a friction loss of less than 6" of water at maximum rate of flow. Working parts will be made of 300 series stainless steel and fabric reinforced synthetic elastomer to ensure corrosion resistance, dimensional stability, and fatigue strength. A nonmetallic hinge shall be integral part of the flapper assembly providing a maximum degree of freedom to assure seating even at a very low backpressure. The valve body shall be in injection-molded part made of glass filled PVC.

Each grinder pump station shall also include one separate check valve for installation in the 1-1/4" service lateral between the grinder pump station and the sewer main, preferably next to the curb stop.

Core Unit

The Grinder Pump Station shall have cartridge type easily removable core assemblies containing pump, motor, grinder, all motor controls, check valve, antisiphon valve, electrical quick disconnect and wiring. The watertight integrity of each core unit shall be established by 100% factory test at a minimum of 5 PSIG.

Controls

All necessary controls shall be located in the top housing of the core unit. The top housing will be attached with stainless steel fasteners.

Non-fouling wastewater level detection for controlling pump operation shall be accomplished by monitoring the pressure changes in an integral air-bell level sensor connected to a pressure switch. The level detection device shall have no moving parts in direct contact with the wastewater. High-level sensing will be accomplished in the manner detailed above by a separate air-bell sensor and pressure switch of the same type.

To assure reliable operation of the pressure sensitive switches, each core shall be equipped with a breather assembly, complete with a suitable means to prevent accidental entry of water into the motor compartment.

The grinder pump will be furnished with a length of 6 conductor 14 gauge, type SJOW cable, pre-wired and watertight to meet UL requirements.

Alarm/Disconnect Panel

Each grinder pump station shall include a NEMA 3R; UL listed ALARM/DISCONNECT PANEL suitable for wall or pole mounting. The NEMA 3R enclosure shall be manufactured of thermoplastic to assure corrosion resistance. The enclosure shall include a hinged, pad lockable cover, secured dead front, and component knockouts. The enclosure shall not exceed 7.5" W x 8.75" H x 3.75" D. For each core, the panel shall contain one (1) 15 amp, double pole circuit breaker for the power circuit and one (1) 15-amp single pole circuit breaker for the alarm circuit.

The panel shall contain terminal blocks, integral power bus, push to run feature and a complete alarm circuit.

The Alarm/Disconnect Panel shall include the following features: audio and visual alarm, push to run switch, and high-level (redundant) pump starting control. The alarm sequence is to be as follows:

1. When liquid level in the sewage wet-well rises above the alarm level, visual and audio alarms will be activated. The contacts on the alarm pressure switch will close. The redundant pump starting system will be energized.

2. The audio alarm may be silenced by means of the externally mounted, push-to-silence button.

3. Visual alarm remains illuminated until the sewage level in the wet-well drops below the "off" setting of the alarm pressure switch.

The visual alarm lamp shall be inside a red fluted lens at least 2 5/8" in diameter and 1 11/16" in height. Visual alarm shall be mounted to the top of the enclosure in such a manner as to maintain NEMA 3R rating. For duplex units, in addition to the above, two high-level indicator lights shall be mounted behind the access cover.

During a high-level alarm condition, the appropriate light will illuminate to indicate which pump core requires servicing.

Serviceability

The grinder pump core unit shall have two lifting eyes complete with nylon liftout harness connected to its top housing to facilitate easy core removal when necessary. All mechanical and electrical connections must provide easy disconnect accessibility for core unit removal and installation. All maintenance tasks for the grinder pump station must be possible without entry of the grinder pump station.

Corrosion Protection

All materials exposed to wastewater shall have inherent corrosion protection; i.e., cast iron, polyethylene, stainless steel, PVC.

Wiring

It shall be the responsibility of the electrical contractor to furnish and install service entrance equipment and/or branch circuit protection and all wiring to the grinder pump leads, in compliance with the appropriate national and local codes.

Safety

The grinder pump shall be free from electrical and fire hazards as required in a residential environment. As evidence of compliance with this requirement, the completely assembled and wired grinder pump station in its tank shall be listed by Underwriters Laboratories, Inc., to be safe and appropriated for the intended use.

The grinder pump shall meet accepted standards for plumbing equipment for use in or near residences, shall be free from noise, odor, or health hazards, and shall have been tested by an independent laboratory to certify its capability to perform as specified in either individual or low pressure sewer system applications. As evidence of compliance with this requirement, the grinder pump shall bear the National Sanitation Foundation seal.

EXECUTION

Factory Test

Each grinder pump core shall be submerged and operate for five minutes (minimum). Included in this procedure will be the testing of all ancillary components such as, the anti-siphon valve, check valve, discharge piping, level sensors, each unit's dedicated controls, respective alarm/disconnect panel, etc. All factory tests shall incorporate each of the above listed items. Actual appurtenances and motor controls that will be installed in the field shall be particular to the tested pump only, a common set of appurtenances and motor controls for all pumps will not be acceptable. Certified test results shall be supplied showing the operation of each grinder pump at three (3) different points on its curve, with the maximum pressure no less than 60 psi. The Engineer reserves the right to inspect such testing procedures with representatives of the Owner, at the Grinder Pump Manufacturer's facility.

Delivery

All grinder pump stations will be delivered to the job site, 100% completely assembled, including testing, ready for installation. Each grinder pump station will have a minimum of four (4) lifting eyes to facilitate unloading and be individually mounted on wooden pallets.

Installation

Earth excavation and backfill are specified under Earthwork, Sections 100 – 111, but are also to be done as a part of the work under this section, including any necessary sheeting and bracing.

The contractor shall be responsible for handling ground water to provide a firm, dry sub grade for the structure, and shall guard against flotation or other damage resulting from general water or flooding. The grinder pump stations shall not be set into the excavation until the installation procedures and excavation have been approved by the Engineer.

Remove packing material. User's instructions MUST be given to the Owner. Hardware supplied with the unit, if required, will be used at installation. The basin will be supplied with a standard 4" DWV (4.50"OD) inlet hub for connecting to the incoming sewer line. Appropriate inlet piping must be used. When moving tank, it should be lifted using all four lifting eyes provided at the lower end of the basin. Do not use these eyes if a concrete collar has been attached to the tank. The basin may not be dropped, rolled or laid on its side for any reason.

Installation shall be accomplished so that 6" of the accessway extends above the finished grade line. The finished grade shall slope away from the unit. The diameter of the hole must be large enough to allow for the concrete anchor.

A 6" (minimum) layer of naturally rounded aggregate, clean and free flowing, with particle size of not less than 1/8" or more than 3/4" shall be used as bedding material under each unit, see Section 108. A concrete anti-flotation collar, as detailed on the drawings, and sized according to the manufacturer's instructions, shall be required and shall be pre-cast to the grinder pump or poured in place. Each grinder pump station with its precast anti-flotation collar shall have a minimum of four (4) lifting eyes for loading and unloading purposes. The unit shall be leveled and filled with water to the bottom of the inlet, to help prevent the unit from shifting while the concrete is being poured. The concrete must be

manually vibrated to ensure there are no voids. If it is necessary to pour the concrete to a level higher than the inlet piping, an 8" sleeve is required over the inlet prior to the concrete being poured.

The Contractor will provide and install a four (4) foot piece of four inch SCH 40 PVC pipe with cap, to stub-out the inlet for the property owner's installation contractor, as depicted on the concrete drawings.

The grinder pump station shall be installed at a minimum depth from grade to the top of the 1-1/4" discharge line, to assure maximum frost protection. The finish grade line shall be 6" below the top of the accessway, and final grade shall slope away from the grinder pump station.

All restoration will be the responsibility of the Contractor. The properties shall be restored to their original condition in all respects including, but not limited to, curb and sidewalk replacement, landscaping, loaming, and seeding, and restoration of the traveled ways, as directed by the Engineer.

The electrical enclosure shall be furnished, installed, and wired to the grinder pump station by the Contractor. An alarm device is required on every installation; there shall be no exceptions. It will be the responsibility of the Contractor and the Engineer to coordinate with the individual property owner(s) to determine the optimum location for the "alarm/disconnect panel".

The contractor shall mount the alarm device in a conspicuous location, as per national and local codes. The alarm/disconnect panel will be connected to the grinder pump station by two (2) UF type cables as shown on the contract drawings. The power and alarm cables must be on separate power circuits.

Start-Up

The Contractor shall provide start-up and field-testing services prior to acceptance by the Owner. All equipment and materials necessary to perform testing shall be the responsibility of the Contractor. This will include, as a minimum, a portable generator (if temporary power is required), ammeter, and water in each basin.

The services of a trained factory-authorized technician shall be provided by the Manufacturer at a rate of one (1) four (4) day week for each 100 grinder pump stations supplied with a minimum of 2 days start-up assistance. Each day shall be ten (10) person hours in duration.

Upon completion of the installation, the Contractor will perform the following test on each station:

1. Make certain the discharge shut-off valve is fully open. The valve must not be closed when the pump is operating. In some installations, there may be a valve(s) at the street main that must also be open.

2. Turn ON the power alarm circuit.

3. Fill the wet well with water to a depth sufficient to verify the high level alarm is operating. Shut off the water.
4. Turn ON pump power circuit. Initiate pump operation to verify automatic "on/off" controls are operative. Pump should immediately turn ON. Within one (1) minute alarm light will turn OFF.

5. Record voltage and amperage readings to verify proper electrical conditions are met.

Upon completion of the start-up and testing, the Contractor shall submit to the Engineer the Manufacturer's start-up authorization form describing the results of the tests performed for each grinder pump station tested bearing the signature of the Manufacturer's authorized technician. Final acceptance of the system will not occur until authorization forms have been received for each pump station installed.

OPERATION AND MAINTENANCE

The Contractor shall provide the following spare parts and tools:

PARTS QUANTITY	PART NUMBER	DESCRIPTION
2	1001	Sensing Bell
1	1003	Impeller
1	1060	Breather Cable Assembly
2	1065	Control Bracket 240 Volt
2	3123	Cable Connector
4	3125	Locknut 5/16" Brass
4	3126	Flat Washer 5/16" SS
2	6035	Grommet Top Housing Discharge
2	6040	Sikabead 25' Roll
2	7090	On/Off Pressure Switch

2	7091	Alarm Pressure Switch
1	7094	EQD Insert Female
1	7095	EQD Insert Male
3	8003	Stator
3	8004	Liner
1	8006	Shredder
1	8008	Rotor
1	8009	Grove Pin

TOOLS	PART	QUANTITY	NUMBER	DESCRIPTION
1	4019			Hand Pump, Vacuum/Pressure
1	4023			Connector Tube 3/16"
1	4028			Seal Assembly Tool
1	4033			Meter, Volt/AM/OHM
1	4034			Bearing Puller Switch
1	4035			Bearing Puller Pump
1	4038			Test Fixture Sensing Bell
1	4039			Molex Pin Remover
1	4040			Breather Air Test Fixture
1	4041			Motor Air Test Fixture
1	4043			Volt/OHM Meter, Wavetek
1	4021			Bearing Press on Tool - Switch
1	4022			Bearing Press on Tool - Pump

Spare Core Quantity	Description
2	Core Unit

Manuals

The Manufacturer shall supply six (6) copies of Operation and Maintenance Manuals.

Force Main Cleanouts/Flushing Connections In-Line and Terminal

The contractor shall furnish and install cleanouts in the pressure grinder systems as shown on the plans and specified herein.

Electrical Service Drops with Junction Box

The contractor shall furnish and install the necessary items to provide for power service to the grinder pump stations as shown on the drawings and specified herein, including power pole, wiring, conduit, conduit fittings, disconnect and meter base installation. The contractor shall be responsible for contacting the local power company when electrical service is desired. Electrical Control Mounts

The contractor shall install the electrical control mounts for each grinder pump installation as shown on the drawings.

The control box and associated components shall be furnished by others. The contractor shall provide all wiring, connections, conduit, and support posts. The unit shall be installed complete and ready for operation. All control mounts shall be placed a minimum of 18" high or above the 25-year flood plane, whichever is greater.

Conduit Electrical Wiring and In-Line Junction Pull Boxes

The contractor shall furnish and install conduit and wire parallel to force mains as shown on the plans and specified herein. The contractor shall verify the conduit size necessary to carry all wiring required to properly provide service to each electrical component.

Wiring shall be sized to handle voltage drops between the service drops and the grinder pumps of no more than 5%. All conduit and wiring shall conform to the National Electric Code. In line junction pull boxes shall be placed at 200' intervals and at each lateral conduit junction as shown on the drawings.

Conduit with Casings Pipe

Electrical conduits for grinder pump systems shall be laid adjacent to force main piping as shown on the drawings. Where conduits are required to cross roadways, they shall be placed in casing pipe buried parallel to the force main. Casings shall be sized to accommodate the conduit as required by the West Virginia Division of Highways.

500

j

January

21, 2016

Section 501
Tank and Integral Accessway

(Models 2012 & 2014) High Density Polyethylene Construction

The tank shall be made of rotationally molded high density polyethylene, with a melt index of 2.0 grams/ 10 minutes or lower to assure high environmental stress cracking resistance. The tank shall have a nominal thickness of 1/2". All seams created during tank construction are to be thermally welded and factory tested for leak tightness. Tank wall and bottom must withstand the pressure exerted by saturated soil loading at maximum burial depth.

All station components must function normally when exposed to maximum external soil and hydrostatic pressure.

The tank shall be furnished with one EPDM grommet (SDR 35 or SDR 40) fitting to accept a 4.50" OD DWV pipe. Tank capacities shall be as shown on the contract drawings. The EPDM grommet fitting can be ordered to accommodate a 6-inch gravity line if a small gravity collection system is used to collect the flow from more than one EDU.

The access way shall be an integral extension of the wet well assembly and include a lockable cover assembly providing low profile mounting and watertight capability. Accessway design and construction shall facilitate field adjustment of station height in increments of 4" or less without the use of any adhesives or sealants requiring cure time before installation can be completed.

The station shall have all necessary penetrations molded in and factory sealed. No field penetrations shall be acceptable.

All discharge piping shall be constructed of 304 Series Stainless Steel and terminate outside the accessway bulkhead with a stainless steel, 1-1/4" female NPT fitting. The discharge piping shall include a stainless steel ball valve rated for 200 psi WOG. The bulkhead penetration shall be factory installed and warranted by the manufacturer to be watertight.

The access way shall include a single NEMA 6 electrical quick disconnect for all power and control functions, factory installed with accessway penetrations warranted by the manufacturer to be watertight. The accessway shall also include

a 2" PVC vent to prevent sewage gases from accumulating in the tank. 501 (Models 2015 & 2016) Fiberglass Reinforced Polyester Resin

The tank shall be custom molded and of fiberglass reinforced polyester resin and shall be furnished with one inlet grommet to accept a 4.50" OD DWV pipe. Tank capacities and dimensions shall be as shown on the contract drawings. The grommet fitting can be ordered to accommodate a 6-inch gravity line if a small gravity collection system is used to collect the flow from more than one EDU.

The access way shall be an integral extension of the FRP tank and shall be made of high-density polyethylene of a grade selected for environmental stress cracking resistance. It shall have an access opening at the top to accept a lockable fiberglass cover.

Section 600

	Page
Section 600.00 – Pump Station	600
Section 601.00 – Concrete Wet Well And Valve Pits	601
Section 601.10 – Valves	601.1
Section 601.20 – Valve Boxes	601.2
Section 601.30 – Flushing Connections	601.3
Section 602.00 – Site Considerations	602
Section 603.00 – Pump Requirements	603
Section 604.00 – Submittals	604
Section 605.00 – Control Center	605
Section 606.00 – Electrical	606
Section 607.00 – Related Work	607
Section 608.00 – Chain Link Fence	608

The Contractor shall furnish and install a complete sewage pumping system. The system shall include two or more submersible pumps with discharge elbows, pump carrier assembly, stainless steel pump rails and guide supports, access frame with hatch covers, NEMA 4 junction box, stainless steel pump lifting chain, a transducer with EG Controls DIGI-GAGE, VARI-GAGE with a backup float system, pedestal mounted control panel, emergency notification system by OmniSite, mounting hardware, precast concrete wet well and valve pit, valves, and other related equipment for the pump station to be completely operational. A Godwin Dri-Prime pump shall be sized appropriately to provide a backup system which shall include a minimum one day fuel suplply. The emergency suction line shall consist of Yelomine PVC pipe (See Section 306.00) mounted securely to the surface. The Yelomine PVC pipe shall enter through the top of the wet well. This pump station will be owned and operated by the Jefferson County Public Service District. All electrical components and control panels shall be manufactured using components from the Square D Company or equal and pumps be manufactured by Flygt.

Pump Design Requirements

All pump station and force main design shall follow, at a minimum, WVBPH standards. The pumps shall be designed/sized utilizing the Hazen Williams equation with a C factor of 120 for the force mains. Pump stations shall be sized to operate with a minimum of a 3.5 peak factor. Attached to these specifications is an exert from the Recommended Standards for Wastewater Facilities Policies for the Design, Review, and Approval of Plans and Specifications for Wastewater Collection and Treatment Facilities 1997 Edition commonly referred to as the “Ten States Standards” method of predicting the peak flows in sewage collection systems. These standards are to be used to determine the peak factor required for pump stations for the Jefferson County PSD. If the peak factor is greater than 3.5, the higher peak factor shall be used.

Section 601.00

Concrete Wet Well and Valve Pits

The pumps shall be field installed in a precast concrete wet well. Dimensionally the wet well shall be sufficient to provide ease in accessing and removing pumps and other components. The wet well shall be configured to accommodate a solids collection basket. A minimum eighteen (18) inches of clearance is required around each pump with an overall minimum six (6) foot inside diameter. The concrete valve pit shall be a precast five (5) foot minimum inside diameter vault. For the precast concrete structures, the bottoms and sides shall be joined with rubber oring gaskets conforming to ASTM-C433. After the concrete structures are set, all external and internal joint surfaces of the concrete shall be troweled smooth using a bituminous water proofing material. Concrete coatings and painting shall be performed as per the manufactures recommendations. Pumps, rails, piping, valves and all other hardware, software and appurtenances shall be stainless steel installed as per manufacturer recommendations. All fasteners (nuts, bolts, washers and screws) and brackets inside the wet well shall be manufactured from 304 stainless steel. Stainless steel intermediate guide rail supports shall be provided for all guide rails. The supports shall be installed at a maximum distance of 7 ½ foot center-to-center intervals.

Wet wells shall be sized such that an individual pump will only be required to run once every hour. The live capacity of the wet well shall be the volume equivalent to the average flow produced in one day. In addition to the live capacity of the wet well, at least two feet of freeboard above the live capacity shall be provided. The lag pump control system shall be designed such that when the volume in the wet well rises one foot above the live capacity the lag pump is energized. An alarm shall be designed to send a warning if the level in the wet well rises to two feet above the live capacity volume. The pumps should remain submerged once the pumping cycle has ended. The top of the wet well and valve vault shall be elevated six (6) inches above the ground line at the site, and sloped away from the vault and opening at 2% grade unless noted otherwise approved by the JCPSD. There shall be no obstructions at the incoming discharge into the wet well.

There shall be but only one inflow inlet entering the wet well. The inflow inlet shall be located such that a solids collection basket, if warranted, could be readily removed without having to remove the pump(s) within the wet well.

The hatch for the pump station shall be constructed of aluminum with an angle frame floor for the access door(s) as manufactured by Bilco Manufacturing (or equal). It shall be watertight, be able to support a 150-pound per square foot live load, be equipped with a flush mounting handle, have stainless steel hinges and tamper resistance hardware and locks. The door(s) shall be self-supporting

in the raised position and have a mechanism to prevent slamming when closing. Under the hatch/hinged door(s) shall be a load-bearing grate (supporting a 150-pound per square foot live load), hinged with flush mounted 'pull-rings'/latch through the aforementioned outermost hatch/hinged door(s). The grate, constructed of aluminum or stainless steel, shall rest on its own frame attached contiguously around the perimeter of the wet well.

Access into the wet well shall be provided with the fall protection grating locking into the hatch/hinged door(s) and remaining self-supporting when raised. All fasteners (nuts, bolts, washers and screws) and brackets inside the wet well shall be manufactured from 304 stainless steel.

A metered water supply with a freeze proof hose bib shall be provided for wash down and cleaning purposes. The installation and fee(s) for the water tap and Capacity Improvement Fees, including any and all appurtenances, including the crock and meter, shall be the responsibility of the Developer to provide from the appropriate water supplier. The hose bibb shall be located within 5 feet of the wet well opening and also be installed with a West Virginia Bureau of Public Health approved reduced pressure type ‘backflow-preventer’.

Section 601.10

Valves

Check valve 3-inch and larger

A. All check valves, unless otherwise designated shall be iron body, bronze mounted, quiet closing (non-slam), clearway valves with low head loss and with adjustable springs or lever with shafts of stainless steel.
B. These valves shall be flanged end with ANSI B16.1, 125 lb. drilling.
C. The valves shall be ordered to suit either horizontal or vertical locations as the case might be.
D. Check valves to be Kennedy Fig 106L Swing, or Clow List 114 Swing Check Valves or M & H Swing Check Valve, American Flow Control Series 600 Swing Check Valve or District approved equal.
E. The Contractor shall provide electric work, accessories, controls, floor stand, brackets and mechanical actuator necessary to accommodate the installation.

Check valve 2½-inch and smaller

A. All check valves, unless otherwise designated, shall be iron body, bronze mounted.
B. These valves shall be female national pipe thread each end.
C. Check valves to be order either horizontal or vertical locations as the case might be. However, ball check valve mounted in the horizontal position requires 20 feet of static head for proper seating. In the vertical position 10 feet is recommended.
D. It shall be the Contractor's and valve manufacturer's responsibility to verify that the head and piping configuration will provide proper check valve operation and service for each installation.
E. Check valves to be Flowmatic, Dynaquip, Ames, Nibco, or District approved equal.
F. The Contractor shall provide accessories, controls, floor stand, brackets, and mechanical actuator necessary to accommodate the installation.

Plug Valves

A. All sewage and sludge valves shall be of the non-lubricated, eccentric type with resilient faced plugs and screwed, flanged, or mechanical joint ends, as shown on the plans. Port areas shall be full pipe area. AWWA - C504.
B. Bodies shall be high 100% cast iron strength with raised seats. Seats shall be one piece, solid seat cast of 334 stainless steel on all surfaces. Valves

shall have permanently lubricated Teflon bearings in the upper and lower plug stem journals. All valves shall be of the bolted bonnet design. All 4 inch and larger valves shall be designed so that they can be repacked without removing the bonnet and the packing shall be adjustable. 601.1

C. Resilient plug facings shall be suitable for use with water, sewage or sludge. Flanged pipe shall be ANSI 125 lb template. Mechanical joint shall be ANSI/AWWA - C111-A21.1.
D. Manual valves shall have lever or gear actuators and tee wrenches, extension stems, floorstands, etc., as indicated on plans. Stem guides shall be provided per manufacturer's recommendations. All valves 8 inches and larger shall be equipped with gear actuators. All gearing shall be enclosed in a semi-steel housing and be suitable for running in a lubricant with seals provided on all shafts to prevent entry of dirt and water into the actuator. The actuator shaft and the quadrant shall be supported on permanently lubricated bronze bearings. Actuators shall clearly indicate valve position and adjustable stop shall be provided to set closing torque.
E. Valves and gear actuators for buried or submerged services shall have seals on all shafts and gaskets on the valve and actuator covers to prevent the entry of water. Actuator mounting brackets for buried or submerged service shall be totally enclosed and shall have gasket seals.
F. Where required, brackets, stem guides, extension stems and valve boxes shall be provided.
G. One (1) operating wrench shall be provided with each different size valve.
H. The valves of this type shall conform to AWWA C-504 and be Clow Series F5412, M&H Style 820, or Engineer's approved equal.

The Contractor shall supply electrical work, controls, stands, weights, and all accessories with valve supplies.

<u>Gate Valves</u>

Gate Valves 2-inches through 30-inches shall be manufactured to meet, and or exceed, all requirements of AWWA C515 for resilient wedge valves and be domestically manufactured or imported.

1) Valve body shall be manufactured of ductile iron with a 250-PSI working pressure.
2) Valve wall thickness shall exceed the minimum requirements of AWWA C153.
3) The valve shall have a fusion bonded epoxy coating inside and out for maximum corrosion resistance.
4) The valve shall have a smooth full diameter waterway with no recesses to trap debris or obstruct flow.

5) The valve stem shall be high strength corrosion resistant bronze.
6) Valve to have torque minimizing thrust washers.
7) The valve shall have upper and lower o-ring stem seals, with the upper orings field replaceable under pressure with valve in the open position.

8) Each valve shall have the pressure rating 250 PSI/250 W and material of manufacture cast into the body itself D.I. Ductile Iron.
9) Valve wedge and wrench nut shall be manufactured of ductile iron and fully encapsulated with nitrile rubber.
10) Sealing gaskets shall be energized o-rings.
11) Mechanical joint gate valves shall be manufactured with anti-rotational bolt slots in sizes 6-inches through 12-inches.
12) The stuffing box shall be constructed of ductile iron.
13) Gate valves 4-inches through 12-inches shall be listed by Underwriters Laboratories, Inc., and Factory Mutual Research Corporation U.L.F.M.
14) Valves and hydrants shall be of the same manufacturer.
15) Flanged Valves in sizes 2-inches through 12inches shall have 125 lb. flanges as required and shall be NRS stem with hand-wheel or nut, as required.

In addition to all the above requirements, the manufacturer must have been in the valve manufacturing business for a period of at least twenty (20) years, and have a ten (10) year warranty against defective material and workmanship. Valves shall be AFC 2500 as manufactured by American Flow Control, or approved equal.

Ball Valves

1-1/2" through 2-1/2" size shall be used on pressure mains. They shall be cast red brass containing 85% copper and 5% tin, 5% lead, and 5% zinc. The ball shall be fluoro-carbon brass. Directional valves shall not be permitted. The valves shall be by one manufacturer. All valves 1-1/2" through 2-1/2" shall be Ford Meter Box Company's B-11 series ball curb valve.

Valve Extension Stems for Ball Valves

All ball valves of 1-1/2" through 2-1/2" size shall have extension stems that extend to within approximately one foot of finished grade.

Valve extension stems shall be factory assembled using 5/8" diameter steel rod that meets ASTM A-36-84-A standards. The top and bottom shall be slotted to accept the valve and operating wrench.

The extension stem pieces shall be high tensile ductile iron; factory pinned and welded in place.

They shall be assembled so as to indicate the position open or closed of the valve.

The stem shall be filled with a 4" diameter steel alignment ring, positioned 4" from the top of the stem.

The stem shall be coated with asphalt paint.

The stem shall be accompanied with a brass cotter pin, to attach it to the valve.

Gate and Plug Valve Extension Stems

All gate valves of 3" and larger size shall have extension stems that extend to within approximately one foot of finished grade. Valve extension stems shall be factory assemble using 7/8" diameter steel rod that meets ASTM A-36-84A standards. The top and bottom shall be 2" square to accept the valve and operating wrench.

The extension stem pieces shall be high tensile ductile iron; factory pinned and welded in place. The stem shall include an open left/open right drop-in indicator to fit the top piece.

The stem shall be fitted with a steel alignment ring, to center it up in the valve box. This ring shall be positioned 10" from the top of the stem.

The stem shall be coated with Asphalt paint.

Bottom stem pieces shall be furnished with 2" stainless steel set screws, to attach it to the valve.

Section 601.20

Valve Boxes

1-1/2" through 2-1/2" Ball Valve boxes shall be cast iron roadway valve boxes. The boxes shall be a two-piece screw type adjustable. The bottoms shall be arched, made of gray cast iron, and shall have a coal tar epoxy coating. The boxes shall be 3 to 4 foot long with 4-1/4" shaft, with one adjustment. Mid box, extensions may be required for greater depths.

3" And Larger Valve Boxes

3" and larger valve boxes shall be cast iron roadway valve boxes. The boxes shall be a two-piece screw-type adjustable. The bottoms shall be round, made of gray cast iron, and shall have a coal tar epoxy coating. The boxes shall be 3 to 4 feet long with 5-1/4" shaft, with one adjustment. Mid box, extensions may be required for greater depths.

Valve Box Lids

Valve box lids shall fit the appropriate valve boxes. They shall be cast iron and shall have a coal tar epoxy coating. They shall be drop lid, which is compatible with the tops of the various valves boxes and shall be marked "SEWER".

601.1 d

Section 601.30

Flushing Connections

Refer to details that show the size, type, and material needed at each flushing connection location for the size and type of system designed.

Item	Vault Inner Diameter	
	18"	24"
Frame Name	PC32S	PC32S
Frame Inner Diameter	18"	18"
Extender Catalogue #	N/A	1"
Top Lid Diameter	11.5"	11.5"
Lid Catalogue #:	Neenah	Neenah
Traffic Areas Lid Catalogue #:	R1915 S1	R1915 S1
Non-Traffic Areas	PC32S	PC32S

Item	PVC Box Inner Diameter	
	18"	24"
Frame Type	Type C	Type C
Lid Diameter	11.5	11.5
Extender Catalogue #	N/A	1
Lid Catalogue #	P C32 S	P C32 S

All frames and covers shall be constructed with a "lifter worm lock" and standard pentagon bolt manufactured by Ford Meter Box Company, or equal. Three no. 1 keys and three no. 3 keys manufactured by Ford Meter Box Company shall be provided to operate the standard pentagon worm lock bolt. Keys for equivalent locking systems may be submitted for approval.

Vaults for Flushing Connections, Traffic Areas

Precast concrete vaults shall be used and installed in all locations where flushing connections are located below stabilized surfaces that are subjected to light vehicular traffic loading. They shall be 36" in diameter.

Vaults for Flushing Connections, Non-Traffic Areas

PVC vaults shall be used and installed in all locations that are not subject to vehicular traffic. They shall have a minimum wall thickness of .300 for PVC. They shall be 24" in diameter as manufactured by Mid-States Meter Boxes, Inc.

Vault Frames and Covers, Traffic Areas

Vault frames and covers that are used in traffic areas shall be designed for AASHTO H-20 wheel loading; Neehan R1916F watertight bolted R1642 T-Seal.

Vault Frames and Covers, Non-Traffic Areas

Frames and covers for vaults located in non-traffic areas shall be of lid construction as are specified. They shall be of a quality as manufactured by Ford Meter Box Company, or an approved equal.

Section 602

Site Considerations

The following listing describes placement and materials required at the pump station site. The control panel must be located above the 100-year flood plain elevation. The control panel shall be installed on a concrete slab at a minimum of 3 feet and a maximum of 5 feet from the wet well opening. It shall be placed such that it does not interfere with operation of the hatch when the cabinet is opened for maintenance. The control panel must open towards the wet well such that both the pumps and the panel can be observed simultaneously. A cooling fan and vent shall be provided within the control panel. A roof structure shall be provided over the control panel to provide protection for the operator and components from elements of the weather. Fluorescent lighting shall be required within the control panel and under the roof structure. Details of the roof structure shall be in accordance with the JCPSD Standard Drawing S-46, Shelter Detail, provided within these specifications.

Provide a platform socket and a hoist frame and apparatus. The hoist platform socket needs to be 12" out of the top of the wet well concrete with the inside diameter being 3". The socket shall be located on the open side of the wet well lid between the pumps. The outside diameter of the socket must be at a minimum of 3 1/2 ".

An external 500 gallon fuel tank must be provided for the Godwin Dri-Prime pump (or equal) with all lines buried in conduit. The Godwin Dri-Prime pump (or equal) must be mounted on a concrete pad unless a trailer mounted Godwin DriPrime pump (or equal) is approved for the particular installation by the General Manager of JCPSD.

The Contractor shall install chain link fence, at a minimum 9 gauge heavy galvanized fabric with twisted and barbed selvages both top and bottom, gates, and other hardware as required by JCPSD's specifications. See Section 600.50.

Provide adequate screening on all sides of the pump station fencing i.e., Leyland Cyprus trees or other screening vegetation. Screening options will be reviewed and approved by the JCPSD on an individual case basis.
Grade the site such that the ground slopes away from the pump station at a minimum of 2%.

Pave pump station site and 6 inches outside the pump station fence with 6 inches of 11/2 inch crusher run stone placed over a geotextile fabric.

Provide a minimum 20-foot wide access easement and construct a 15-foot wide access road to the pump station with 6 inches of Class I base stone and 3 inches of Class 2 finish stone placed over a geotextile fabric. Asphalt or concrete roadway placed in accordance to JCPSD standards in lieu of stone pavement is acceptable. Provide adequate side ditches for run-off/drainage. Additional easement may be required to provide for proper drainage.

Provide an electrical light pole and overhead dusk to dawn light, with a switch option at the gate, to illuminate the pump station site, Lumark model HPTF-GL150MT-SAB site light or equal mounted at 20-foot height.

Section 603.00

Pump Requirements

The Contractor shall furnish and install a minimum of two (2) explosion proof submersible, non-clog wastewater pumps manufactured by HOMA (or equal). The pumps shall be cast iron, heavy-duty submersible pumps operating on threephase power. The power cable shall be sized according to NEC and ICEA standards and also meet with P-MSHA approval. The pump shall be supplied with a mating cast iron discharge connection as shown on the detail.

Pump Installation

The Pump shall be automatically and firmly connected to the discharge connection, guided by no less than two stainless steel guide bars with stainless steel bolts per pump extending from the top of the station to the discharge connection. There shall be no need for personnel to enter the wet-well for pump installation or removal. Sealing of the pumping unit to the discharge connection shall be accomplished by a machined metal-to-metal watertight contact. Sealing of the discharge interface with a diaphragm, O-ring or profile gasket will not be acceptable. No portion of the pump shall bear directly on the wet well floor.

Pump Test

The pump manufacturer shall perform the following inspections and tests on each pump before shipment from the factory:

1. Impeller, motor rating and electrical connections shall first be checked for compliance to the customers purchase order.

2. A motor and cable insulation test for moisture content or insulation defects shall be made.

3. Prior to submergence, the pump shall be run dry to establish correct rotation and mechanical integrity.
4. The pump shall be run submerged in water to a minimum of five (5) ft.

5. After operational test No. 4, the insulation test (No. 2) is to be performed again.

6. Once the pump station is completed and fully operational a pump draw test shall be performed under the supervision of the District personnel or the District's Engineer.

A written report stating the foregoing steps have been successfully completed shall be supplied with each pump at the time of shipment.

Pump Warranty

The pump manufacturer shall warrant the units being supplied to the JCPSD against defects in workmanship and material for a period of two (2) years or 20,000 hours under the Municipal Wastewater-Permanent Installation Warranty Policy under normal use, operation and service. The warranty shall be in printed form and shall apply to all similar units. The style of pump must be in production for a minimum of five (5) years.

Factory Service

Fully stocked parts and factory-approved service facilities including factorytrained mechanics shall be available for emergency and routine service within approximately 120 miles of the District. The equipment manufacturer shall furnish the services of a factory-trained representative for a minimum of four (4) hours at the job site to monitor the installation, the initial operation of the equipment and the instruction of the JCPSD operating personnel in proper operation and maintenance. The training is to be scheduled as per JCPSD General Manager's direction.

Section 604.00

Submittals

The manufacturer shall supply a minimum of six (6) sets of standard Submittal Drawings, Operating and Maintenance Instruction Manuals and Parts Lists.

Standard submittals will consist of:

a) Plan View
b) Pump Outline Drawing
c) Control Data
d) Access Frame
e) Typical Installation Guides
f) Technical Manuals
g) Parts List

Section 605.00

Control Center

The Contractor shall furnish and install one intrinsically safe automatic pump control center in NEMA 4, stainless steel, enclosure designed for use with components operating at 460 volts or the highest industrial standard voltage lower than 460 available in 3 phase service at the site. A four-wire power supply shall be included for all 3-phase panels. This control panel shall be manufactured by EG Controls (or equal), DIGI-GAGE, VARI-GAGE controls (or equal) and include the following:

S One motor starter unit with quick-trip overload elements sized for individual pump protection, including heavy duty, across-the-line contactor per pump

S One approved solid-state intrinsically safe control module per level function

S Solid-state hybrid alternator

S Pump running lights for each pump

S One "Hand-Off-Auto" selector switch per pump

S 120 volt control circuits and transformer

S Grounded barrier between power and intrinsically safe circuits

S Terminals provided for connection of the power supply, pump(s), level sensors, remote monitoring system and motor pilot thermal switches

S A combination circuit breaker/overload unit providing overload protection, short-circuit protection, reset and disconnect for all phases per pump

SA 24 volt control circuit transformer with disconnect circuit breaker and overload protection, for external pilot circuitry shall be included with an automatic electric alternator for duplex pump stations (providing alternating operation of pumps under normal conditions, or in cases of high level, allowing both pumps to operate simultaneously)

S Condensation heaters

S Cooling fan for controls

S Running time meter (non-reset type) for each pump

S Amp Meter for each pump

S Pedestal mounting within five (5) foot of the wet well. Location shall be determined during plan approval process prior to construction

S Pump leakage indicator for each pump

S Pump overload/high temperature shut-down and indicator for each pump

S Pump seal failure indicator for each pump

S Lightening arrester

S Wet well level control

S System short circuit, motor overload and over temperature protection

S High power circuits and components fully separated from low power logic circuits

S Hinged dead front panel for easy and safe service access

S Operator's control color-coded to specific functions

S Plug-in components mounting for easy replacement

S A dual 110/120 GFI outdoor rated receptacle

S A Crystal Ball emergency notification system by OmniSite shall be utilized. Provide alarm light and horn for control center.

S All electrical work shall be in full compliance with NEC, NEMA and UL design guidelines and requirements.

S The control panel shall have an interior light with an automatic switch built into the door

The control panel should be mounted on 5/4-inch X 6-inch pressure treated boards. The control panel shall be positioned such that the hatch, when opened for maintenance, does not interfere with access to the control panel.

Section 606.00

Electrical

The Contractor shall furnish and install all electrical components including wiring, conduits and gas tight conduits inside the wet well, fillings, connections, disconnects, junction boxes, transfer switches, motor control center, power pole and any other item incidentals required for a complete and operational pump station. Above ground conduits shall be metal, underground conduit may be schedule 80 PVC.

Schedule 80 PVC Pipe and Fittings

All Schedule 80 PVC pipe shall conform to ASTM D-1785 classification, material conforming to 12454-B, and be gray in color.

Schedule 80 PVC pipe fittings shall be manufactured in conformance with ASTM D-2464 specification, material conforming to 12454-B, and shall be threaded; with the following exceptions:

1. Socket wall thickness over the threads, of threaded type fittings, shall be a minimum of 25% greater than the thickness of the schedule 80 pipe.

2. Body wall thickness shall be 50% greater than the thickness of the schedule 80 pipe.

All threads shall be machined tapped conforming to ANSI specification B2.1.

The "Quick Burst" strength of the fittings shall equal or exceed the "Quick Burst" strength of the equivalent schedule 80 PVC pipe.

Pipe and fittings shall be as manufactured by R&G Sloan Mfg. Co., Inc.; Flow Control, Inc.; or approved equal.

Threading Compound

When threaded PVC pipe is mated to threaded PVC or metal threaded pipe, the use of a Teflon-based threading compound shall be required.

The compound shall be made of nylon, polyester and T.F.E. resin.

The compound shall be formulated and approved for use on PVC, brass, steel, iron, aluminum and stainless steel threaded connections. Threading compound shall be Restorseal T-Plus 2 Pipe Thread Compound, or approved equal.

Conduits

The conduits shall be sized to allow two additional circuits to be added in the future.

Junction Box Placement

Junction boxes shall consist of stainless steel material and be easily accessible above the pump station top and placed so that they do not interfere with the operation of the wet well hatch cover.

Liquid Level Sensors

The Contractor shall furnish and install a transducer with EG Controls DIGI – GAGE, VARI-GAGE (or equal) system with multiple liquid level sensors with electrical cable necessary for the installation.

Spare Parts

The Contractor will supply the JCPSD a spare starter, capacitor kit, circuit breaker(s) and relay if used in the station.

Locks

The Contractor shall provide Heavy Duty Master Lock PAD Locks on all, control panels and pump station covers. Keys shall be provided to the owner for each lock as soon as locks are installed. Owner shall be contacted to match locks and keys with existing sewer utility standards, if so desired by owner.

Section 606.10

Installation

A. All wiring shall be in conduit.

B. In general, the conduit system shall be concealed in the construction of the building and built-in along with the construction work.

C. Protect conduits from mechanical injury during building construction.

D. The use of running threads will not be permitted, and where necessary, Erickson couplings or split malleable iron couplings of OZ manufacturer shall be used.

E. Conduit "1" and under may be concealed in floor slabs on grade or other floor slabs thicker than 4", taking particular care not to interfere with any reinforcing.

F. No conduit smaller than 3/4" shall be used.

G. All conduits when exposed shall be run with particular care. Such conduit shall be run straight, right angles to, or parallel with, beams and columns, and shall be substantially supported with pipe straps or suitable clamps or hangers.

H. All conduits shall be run in such a manner as to avoid steam or hot water pipes. Where crossings are unavoidable, the separation shall be not less than 3", and where the separation cannot be maintained, magnesia covering shall be secured to the steam or hot water piping.

I. Conduit shall be continuous from outlet to outlet, and from outlet to cabinets, junction boxes and pull boxes.

J. All conduits entering outlet boxes, etc., shall be secured with long galvanized bushings and lock nuts. All ends of conduit shall be reamed clear of burrs and fins with a reamer, and all joints under couplings shall be butt joints. Hacksaws shall be used in cutting conduit. Any conduit crushed or deformed in bending will be rejected.

K. Feeders above ground shall be run in galvanized rigid conduit.

606.1

L. Concealed branch circuits may be run in electrical metallic tubing.

M. Exposed branch circuits shall be run in galvanized rigid conduit.

N. Connections to motors and moving machinery shall be made with a section of U.L. listed water tight flexible conduit not exceeding 30" in length.

<u>Conduit</u>

A. All rigid conduit shall be galvanized on the inside and outside by one of the methods of hot-dip galvanizing or electro-galvanizing, and shall meet Federal Specification No. WWC-58 lb.

B. All electrical metallic tubing (thin-wall) shall be galvanized on the inside and outside and shall meet Federal Specification No. WW-T805A.

C. All flexible conduit shall be watertight flexible couplings conforming to U.L. standard 886 and shall be U.L. listed. Flexible couplings shall have a ground braid.

D. All plastic conduit shall be extra heavy schedule 40 polyvinyl chloride conduit.

E. All conduit proposed for suspension on treatment structures shall be PVC coated steel.

Wire

A. All wire below 600 volts used throughout the work shall be soft drawn copper of not less than 98 percent conductivity and shall be manufactured by General Electric, or equal.

B. All wiring shall be furnished with standard coded colors as called for hereinafter. All wiring shall bear the size, type, number and the manufacturer's name at repeated intervals along its length. All wire shall be type THW or type THHN. Except in control wiring no wiring smaller than #12 shall be used.

Wire Connections and Devices

A. Connections for all wires, including connections to fixture wires, shall be secured by soldering with a fusible metal alloy or by use of solderless connectors such as Burndy "Hydent", or equal. All splices shall be covered by insulation equal to that on the conductors. Insulation shall be vinyl or neoprene tape or molded plastic insulation for the solderless connectors. Solderless connectors shall be U.L. approved and screw type connectors are not acceptable.

Outlets

A. All outlets for lights, wall switches, etc., shall have an approved outlet box in every instance of such type and form suited to its specific location, kind of fixture to be used, and the number, size and arrangement of conduits connecting thereto.

Grounding Bushings

A. Provide locking type grounding bushings on each end of each feeder. Bond conduit to each cabinet through grounding bushing.

B. Provide locking type grounding bushings on each end of conduit with green frame ground. Bond green frame ground to each end of conduit through grounding bushings.

C. Provide locking type grounding bushings on each end of conduit for service ground and bond ground to this conduit.

D. Grounding bushings shall be OZ, type BL, or equal of Union Insulating Company.

Pulling Cables

A. Suitable installation equipment shall be provided to prevent cutting and abrasion of conduits during the pulling of conductors. Ropes used for pulling of conductors shall be polyethylene or other suitable non-metallic material. Metallic ropes shall not be used.

B. Wire pulling lubricants shall be used and shall be U.L. approved.

C. Pulling lines shall be attached to conductor cables by means of woven basket grips or pulling eyes attached directly to the cables. Rope hitches shall not be used. All cable to be installed in a single conduit shall be pulled in together.

Outlet Boxes

A. All outlet boxes shall be set so that their outer edges will not project beyond the face of the finished wall or ceiling line.

B. Boxes shall be made of pressed steel not less than #14 U.S. sheet metal gauge, or cast metal not less than 1/8" thick. They shall be galvanized and manufactured by General Electric, or equal. Boxes shall be the type for the particular purpose for which each is intended, and not less than 1-5/8" deep.

C. Boxes for the ceiling and interior brackets shall have 3/8" malleable iron fixture studs of the no-bolt type, fastened to top of box with lock nuts. Outlets in plaster ceiling shall be mounted on bar hangers with O-Z Co.'s bar clips or equal where in suspended ceilings.

D. All surface conduit fittings, outlet boxes and other special fittings shall be solid cast fittings, galvanized or cadmium plated, made by Crouse Hinds, or equal.

Pull Boxes and Junction Boxes

A. Provide pull boxes wherever required to facilitate the pulling of wire.

B. Provide junction boxes required for the proper installation of the electrical work.

C. Pull boxes and junction boxes shall be made of code gauge galvanized steel where concealed and stainless steel equal to ASTM, Class 30A in exposed areas.

D. Pull boxes and junction boxes installed in concrete or plaster in unfinished areas shall be set with their covers flush with finished concrete or plaster.

E. Provide hinged access panels of types compatible with the construction as required to provide access to all concealed junction boxes or pull boxes in finished spaces.

F. Pull boxes shall be sized to allow ease in handling and proper sweep of all conductors and shall have the volume required by the code.

G. Boxes mounted horizontally on ceiling shall have covers secured with brass machine screws. Boxes mounted vertically shall have hinged doors with catch locks.

H. For exterior fixtures and waterproof switches and devices, cast non-ferrous boxes with proper weatherproof cover shall be provided.

Supporting Devices

A. All exposed conduit shall be supported by pipe straps and/or pipe hangers. Pipe straps shall be Type 1, Style A or Style B in accordance with Federal Specification FF 760 a.

B. Pipe straps and hanger rods shall be fastened to concrete by means of inserts or expansion bolts, to brickwork by expansion bolts and to hollow masonry by means of toggle bolts. Sizes of expansion bolts and shields shall be such that the proof test load shall not be less than four times the actual working load. Wooden, plastic or rawhide plugs shall not be used for fastening pipe straps and hangers.

C. All conduits not embedded in concrete or masonry shall be securely and independently supported so that no strain will be transmitted to outlet box or pull boxes. Supports shall be rigid enough to prevent distortion of conduits during wire pulling.

D. Supports for horizontal conduits and EMT shall not be greater than the distances specified below:

Conduit Size	Spacing of Supports
Up to 1"	6 ft.
1-1/4" to 1-1/2"	8 ft.
2" to 4"	10 ft.

606.1 d

E. A support shall be placed within one foot of each elbow, box or piece of equipment.

F. Provide all supporting devices as required to mount all disconnect switches, push buttons, individual starters or other devices in accordance with standard good practice.

G. In general, these devices shall be mounted on an electrical channel support system. Channel support system shall be by Kindorf, Unistrut or equal.

Underground Electrical Construction

A. Underground electrical conduit may be either rigid galvanized conduit made up with water tight connections or schedule 80 PVC conduit made up with PVC fittings and solvent type cement as recommended by the conduit manufacturer. If the Electrician elects to use the PVC conduit he shall pull a green ground in all PVC conduits.

B. Provide either cast aluminum or precast concrete junction boxes or pull boxes as required to pull the conductors in the underground conduit. Covers of junction boxes shall bolt to the box and shall be set flush with grade.

C. All underground electrical conduits shall have, at a minimum, two (2) feet of cover.

D. The Contractor shall do all ditching and backfilling required for the installation of the underground conduit. The Contractor shall be responsible for the final location underground conduit and shall locate this conduit so that there will be no interference between this conduit and any other underground lines or construction. All trenching and backfilling shall be in accordance with the requirements for process piping.

Section 607.00

Related Work

Related work shall include: light pole, lights, and any other items and appurtenances necessary to provide a complete and operational facility as shown on the drawings.

Light and pole shall be installed in opposite corners of the enclosed pump station site with an override switch at the gate.

Section 608.00

Chain Link Fence

Provide a 6-foot high chain link fence with 3 strands of barbed wire, locking 10foot wide vehicle gate (double gates), and other hardware as required by the plans and these specifications. Material shall be delivered onto the site with the manufacturer's original packaging with all tags and labels intact and legible. Fence and hardware shall be handled and stored as to avoid any damage.

Post, Rails, and Braces

All tubular members shall comply with provisions of ASTM–120 for weight and coating. All structural shapes shall comply with provisions of ASTM-123 for galvanized coating. Braces shall be installed that posts are plumb when diagonal rod is at proper tension.

End, Corner, and Pull Posts

Posts shall be of 2–7/8" outside diameter pipe weighing 5.79 pounds per linear foot, or as indicated on contract drawings.

Line Posts (10'-0" Maximum spacing)

H-Section shall weigh 2.70 pounds per linear foot with 2.375" outside diameter pipe weighing 2.65 pounds per linear foot, or as indicated on contract drawings.

Gateposts

Gateposts shall consist of 2.875" outside diameter pipe, weighing 5.79 pounds per linear foot, or as directed by the contract drawings.

Top Rail

Top rail shall consist of 1.660" outside diameter pipe, weighing 2.27 pounds per linear foot, or as indicated on the contract drawings. Provide means for attaching top rail securely to each gate, corner, pull, and end post. Top rail shall form a continuous brace from end to end of each run of fence.

Post Bracing Assembly

Post bracing assembly shall consist of 1.660" outside diameter pipe, weighing 2.27 pounds per linear foot (for horizontal braces) or 3.8" diameter rod with adjustable take-up (for diagonal truss), or as indicated on the contract drawings.

608

Chain Link Fabric

Use 9-gauge chain link fabric.

Selvage Edge

Top and bottom of fabric shall have twisted and barbed selvages.

Finishes

Heavy galvanized, 2.0-ounce zinc per square foot, complying with ASTM A 392, Class II aluminum coated, 0.40-ounce aluminum per square foot, complying with ASTM A 491, Class II.

Accessories

All accessories, except tie wires and barbed wire, shall be galvanized to comply with ASTM A-153.

Barbed Wire Supporting Arms

Supporting arms shall consist of pressed steel, complete with provisions for anchorage to end, corner, and pull posts and attaching three (3) rows of barbed wire to each arm. Single ("V" shaped) arms shall be integral with a post top weather cap. Intermediate arms shall have a hole for passage of top rail. Arms shall be capable of withstanding without failure; 300 pounds downward pull at outermost end of arm.

Barbed Wire

Two strands, 12-1/2 gauge wire with 14-gauge, 4-point round barbs spaced approximately 5" on center finished as follows:

Galvanized: ASTM A-121, Class III
Aluminized: ASTM A-585, Class II

Install three (3) parallel wires on each extension arm, along outside of fence, unless otherwise shown on contract drawing. Pull wire taut.

Post Tops

Consisting of pressed steel, or malleable iron, designed as a watertight closure cap for tubular posts. Provide one cap for each post unless equal protection is afforded by combination post top cap and barbed wire is required.

Where top rail is used, provide tops to permit passage of top rail.

Stretcher Bars

Stretcher bars consists of one-piece lengths equal to full height of fabric with a minimum of cross section of 3/16" X ¾". Provide one stretcher bar for each gate and end post, and two (2) for each corner and pull post.

Stretcher Bar Bands

Consists of pressed steel, or malleable iron, spaced not over 15" on center to secure stretcher bars to end, corner, pull, and gate posts.

Double Gates

Fabricated gate perimeter frames of 1.90” outside diameter tubular members, provide additional horizontal and vertical members to ensure proper gate operation and for attachment of fabric, hardware, and accessories.

Assemble gate frames by welding or with fittings and rivets for rigid connections. Use same fabric for fence, unless otherwise indicated. Install fabric with stretcher bars at vertical edges, and tie wires at top and bottom edges. Attach stretcher bars to gate frame at not more than 15” on center spacing. Attach hardware with rivets or other means that will provide security against removal or breakage.

Provide diagonal cross bracing, consisting of 3/8’ diameter adjustable length truss rods on gates where necessary to provide frame rigidity without sag or twist.

Install gates plumb, level, and secure for full opening without interference. Provide gate stops for all double gates, consisting of mushroom type flush plate with anchors. Set in concrete to engage the center drop rod or plunger bar. Provide locking device and padlock eyes as an integral part of the latch, requiring one padlock for locking both gate leaves.

Provide the following gate hardware and accessories:

Hinges:

Pressed steel or malleable iron suit gate size, non-lift-off type, offset to permit 180 degree gate opening. Provide one (1) pair hinges for each leaf.

Latch:

Forked type or plunger-bar type to permit operation from either side of gate. Provide padlock eye as integral part of latch.

Keeper:

Provide keeper for all vehicle gates, which automatically engages the gate leaf and holds it in the open position until manually released.

Miscellaneous Material

Wire Ties

Secure fabric to line posts using six (6) gauge steel wire clips for Hsection posts and minimum nine gauge aluminum or steel ties for tubular posts spaced at 14-inches on center.

Use U-shape clips of wire, securely fastened around pipe to which attached, clasping pipe and fabric firmly. Bend ends of wire to minimize hazard to persons or clothing.

Fasteners

Install nuts for tension band and hardware bolts on side of fence opposite fabric side.

6-1/2 Bag Concrete Plant Mix

Portland Cement shall comply with ASTM C33. The concrete shall have a 28-day minimum compressive strength of 3,500 p.s.i., a maximum three (3) inch slump, 2% - 4% air entrainment, and comply with ASTM C94.

Sewer Collection System
Specifications

Section 700

Page

Section 700 – Restoration, including Roadway Repairs & Warranty

Section 701.00 – Maintenance of Traffic (MOT) 701

Section 702.00 – Patch within Roadway

700 Pavement 702
Section 704.00 – Sidewalk Replacement 704
Section 703.00 – Curb or Curb & Gutter Replacement 703
Section 708.00 – Guarantee 708

Section 700

Restoration Including Roadway Repairs

Complete repairs, restoration of any and all improvements caused by damage done due to sewer construction/maintenance on this site shall be made upon the direction of the Project Engineer, Inspector, Town, County, or West Virginia Department of Highways.

Section 701.00 Maintenance of Traffic (MOT)

Traffic must be maintained through all phases of construction in accordance with the current edition of the manual, "Traffic Control for Street and Highway Construction and Maintenance Operations", published by the West Virginia Division of Highways (WVDOH) and/or an approved traffic control plan (TCP). The Contractor shall protect its employees, equipment, as well as to safeguard vehicular and pedestrian traffic through the area under construction at all times.

Section 702.00 Patch within Roadway Pavement

Repairs within improved roads and driveways shall be made in accordance to the West Virginia Division of Highways (WVDOH) current manual, "Accommodations of Utilities on Highway Right of Way and Adjustment and Relocation of Utility Facilities on Highway Projects". The specific roadway or driveway repair(s) shall be in accordance to WVDOH Standard Figure 3 of above referenced WVDOH manual. See Appendix 'D' of these JCPSD Specifications.

Section 703.00

Curb or Curb & Gutter Replacement

Roadways with curb and/or curb and gutter shall be replaced in-kind, including material type, i.e. bituminous concrete or Portland Cement concrete with J-bolts, expansion material, and joint patterns, if applicable. Portland-Cement concrete curb or curb & gutter joints shall be spaced ten foot on center, with the minimum section of six feet and the maximum section of twelve feet. Expansion joints shall be placed at intervals of 100 feet for Portland Cement concrete curb or curb & gutter. All materials shall meet current WVDOH specifications.

Section 704.00

Sidewalk Replacement

Sidewalks shall be replaced in-kind, including material type, i.e. bituminous concrete or Portland Cement concrete. Portland-Cement concrete sidewalk joints shall be spaced four or five foot on center. Expansion joints shall be placed at intervals of 100 feet for Portland Cement concrete sidewalk. All materials shall meet current WVDOH specifications. See PSD Standard No. S-7.

Section 705.00

Guarantee

The Developer and Contractor shall guarantee all pavement work and pavement repair work, including sidewalks, curb, and curb & gutter completed incidental to the installation and repair to the wastewater lines for a period of two (2) years following acceptance by JCPSD, and shall repair or replace, at no cost to JCPSD, any pavement or pavement repair, which crumbles, cracks, or is otherwise unsound during this two year period. Warranty period does not go into effect until roadways have been inspected and approved by Town, County, or WVDOH. If asphalt work involves town, county or state encroachment permits, it is the contractors and developers responsibility to assure that all permit requirements have been met.

Appendix A

Plan Submittal Checklist

General Information

Transmittal shall be attached, explaining specific purpose of submission with limits of approval.

If expedited service is requested, attach a letter explaining needs.

Plans shall be submitted in triplicate.

Provide copy of Recorded Plat.

Previous review comments shall be included with re-submittals.

Provide a Deed of Easement at time of recordation for any sanitary sewer easement proposed by this plan in accordance to PSD criteria. Deed of Easement(s) must be recorded prior to the start of construction and/or sales contracts for any property included within the approved plan.

Plans shall include:

Engineer's Seal, signed and dated.

Name, address, and phone number of engineering firm.

Subdivision name.

Vicinity Map (scale of 1”=2,000’).

North Arrow.

Overall View of the attached plan sheets.

Plan Scale: 1”= 50’.

Identify Lot & Block numbers.

Show Street Name(s).

General notes for sanitary sewer.

Plan Sheet – Existing Conditions/Features:

Water and sanitary sewer systems, including structures, size and type pipe.

Gravity sewer, labeled ‘s.s.’

Force Main sewer, labeled ‘FM’.

Other underground utilities.

Utility poles.
Buildings/Permanent structures.

Curbs & gutters, paving, sidewalks, driveways, landscaping.

Storm drainage pipes and structures.

Streams, channels, or drainage ditches.

Plan Sheet – Proposed Site Improvements

Proposed water and sewer, including pipe sizes (Gravity sewer shall be labeled 's.s.' Force Main shall be labeled 'FM').

Proposed roadways, storm drain systems and other pertinent features, i.e. house and commercial footprints including detached structures. Sanitary sewer lines and easements must be clear of structures and plantings.

Pipe and Structure Schedules – Proposed Sewer

Pipe schedule showing class of pipe, pipe sizes, length of each class of pipe and size, system (Gravity sewer shall be labeled "SS", Force Main shall be labeled "FM").

Structure schedule showing structure types, top and invert elevations, and dimensions of structure.

Structure numbers must match plan, structure schedule, and profile.

Sanitary sewer easements shall be referenced by Deed Book and page.

A-2

Sanitary Sewer Profiles

Horizontal scale 1"= 50'

Vertical scale 1"= 10'

Structure numbers must match plan, structure schedule, and profile.

Pipe lengths shown by stationing at each structure.

Pipe size, material, class, and slope shall be shown for each run of pipe. Gravity sewer shall be labeled "SS" Force Main shall be labeled "FM".

It shall be the responsibility of the Developer and/or the Developer's Engineer to determine if the proposed improvements conflicts with other existing facilities and to maintain the appropriate clearances required.

Applications for neither permits nor licenses shall be made prior to plan approval by the JCPSD. Should permit or license require a revision of the approved plan,

the plan shall be resubmitted to the JCPSD for approval of any and all revisions. Plan(s) submitted for permit or license shall be submitted with JCPSD approval stamp signed and dated by the General Manager, JCPSD.

Appendix B

Glossary

Adequately Sized Grease Interceptor: an interceptor that has been sized in accordance with the pretreatment standards prescribed within the "Sewer Use Ordinance".

AASSHTO: American Association of State Highway & Transportation Officials

ASA: American Standards Association

ASCE: American Society of Civil Engineers

ASTM: American Society for Testing and Materials

AWWA: American Water Works Association

Biological Pretest Service: the application of any additive or enzyme or the use of any other biological means to digest waste in an interceptor that discharges into a public sewer system.

Bituminous Concrete: (Asphalt Pavement) shall comply with WVDOH Specifications.

BOD: Biochemical Oxygen Demand is the quantity of oxygen utilized in the biochemical oxidation or organic matter under standard laboratory procedures in five (5) days at 20 degrees centigrade, expressed in milligrams per liter.

Builder: any person, persons, or corporation undertaking to construct either under contract or for resale any habitable building.

Building: a structure constructed, erected, and framed of component structural parts designed for the housing, shelter, enclosure, or support of persons, animals, or any kind of property.

Building Drain: that part of the lowest horizontal piping of a drainage pipes inside the walls of the building and conveys it to the building sewer, beginning three (3) feet outside the inner face of the building wall.

Building Sewer: the extension from building drain to the public sewer or other place of disposal.

Commercial User: any non-residential or non-public user not falling under the definition of Industrial User.

Contractor: any person, persons, firm or corporation hired by the Builder, Developer, or District.

Crusher Run: Graded Aggregate for sub-base courses is crushed stone aggregate, fine aggregate and water, all mechanically mixed. The gradation of the final composite mixture shall conform to current WVDOH Specifications. *CR-6 (1½inch minus) or CR-8 (1-inch minus).

Customer: the party, whether owner or tenant, utilizing sewer service furnished by the District to a property.

DEP: West Virginia Department of Environmental Protection

Debt Service: costs to the District for the retirement of debts incurred in the provision of wastewater facilities including both principal and interest.

Developer: Any person, persons, or corporation undertaking the simultaneous construction of more than one housing or commercial unit on a given tract or land subdivision.

Discharge: the introduction of waste into the POTW.

Disposal: the discharge, deposit, injection, dumping, spilling, leaking or placing of any solids or semi-solid grease interceptor waste, grit interceptor waste, and/or sewage into or on any land or water so that such waste or any constituent thereof may enter the environment or be emitted into the air or discharged into any waters, including ground waters.

District: Jefferson County Public Service District.

Dwelling: any house trailer or building used, intended, or designed to be built, used, rented, leased, let or hired out to be occupied, or that is occupied for living purposes.

Easement: An acquired legal right for specific use of land owned by others.

Equivalent Dwelling Unit (EDU): the wastewater flow equivalent to that contributed by an average residential user. One EDU shall equal 180 gallons per day, which equals 65,700 gallons per year.

Emulsifiers or De-emulsifiers: any substance or substances which, when added or placed into a grease trap or grease interceptor, will form an oily substance to a milky fluid in which the fat globules are in a very finely divided state and are held in suspension, giving it the semblance of a solution; as the homogenization of milk emulsifies the fat with the whey forming a smooth milk product.

Engineer: Professional Engineer retained by the Builder, Developer, or District.

Equivalent Dwelling Unit (EDU): the wastewater flow equivalent to that contributed by an average residential user. One EDU shall equal 180 gallons per day which equals 65,700 gallons per year.

Fats: substances that are primarily fatty acid esters of alcohol glycerol, also called acylglycerols, neutral fats, natural fats, or glycerides. They are the major components of depot, or storage, fats in plant and animal cells, especially in the adipose (or fat) cells of vertebrates. This term may include any synthesized substance of a like nature.

Floatable Oil: oil, fat, or grease in a physical state such that it will separate by gravity from wastewater in an approved pretreatment facility. A wastewater shall

be considered free of floatable oil if it is properly pretreated and the wastewater does not interfere with the collection system.

Food Service Establishment: any facility that cuts, cooks, bakes, prepares or serves food, or which disposes of food-related wastes and/or which has local, state, and/or federal food service permit.

Garbage: solid wastes from the domestic and commercial preparation, cooking, and dispensing of food, and from handling, storage, and sales of meat, fish, fowl, fruits, vegetables, and condemned food.

Garbage Grinder: a device, which shreds or grinds up solid or semisolid waste materials into smaller portions for discharge into the POTW.

Generator: a facility that causes, creates, generates, stores, or otherwise produces waste from on-site process operations, whether domestically or commercially generated, or as a byproduct of some domestic or non-domestic activity. The generator is responsible for assuring that the produced waste is disposed of in accordance with all federal, state, and local disposal regulations.

Grease: fats, waxes, free fatty acids, calcium, and magnesium soaps, mineral oils and certain other non-fatty material from animal or vegetable sources, or from hydrocarbons of petroleum origins, commonly found in wastewater from food preparation and food service. Grease may originate from, but not be limited to, discharges from scullery sinks, pot and pan sinks, dishwashing machines, soup kettles, and floor drains located in areas where grease- containing materials may exist.

Grease Interceptor or Interceptor: a water-tight receptacle utilized by commercial or industrial generators of liquid waste to intercept, collect, and restrict, the passage of grease and food particles into the POTW to which the receptacle is directly or indirectly connected, and to separate and retain grease and food particles from the wastewater discharged by the facility.

Grease Interceptor Waste: any grease, food, particles, or organic or inorganic solid or semisolid waste collected and intercepted by a grease interceptor, usually in layers of floatable, suspended, and settleable substances, which are ultimately

removed from a grease interceptor for proper disposal. All layers must be removed for disposal.

Improved Property: any property located within the District upon which there is erected a structure intended for continuous or periodic habitation, occupancy or use by human beings of animals and from which structure sanitary sewage and/or industrial wastes are or may be discharged.

Industrial User:

(a) Any non-governmental, non-residential user of a publicly owned treatment works which discharges more than the equivalent of 25,000 gallons per day (gpd) of sanitary waste and which is identified in the Standard Industrial Classification Manual, 1972, Office of Management and Budget, as amended and supplemented under on of the following divisions:

Division A: Agriculture, Forestry, and Fishing
Division B: Mining
Division C: Manufacturing
Division D: Transportation, Communications, Electric, Gas, and Sanitary Services
Division E: Services

Discharges in the above divisions that have a volume exceeding 25,000 gpd or the weight of biochemical oxygen demand (BOD) or suspended solids (SS) equivalent to that weight found in 25,000 gpd of sanitary waste are considered industrial users. Sanitary waste, for purpose of this calculation of equivalency, shall be wastes of normal or domestic concentration as defined in the “Sewer Use Ordinance”.

(b) Any non-governmental user who discharges wastewater to the District’s sewers which wastewater contains toxic pollutants or poisonous solids, liquids, or gases in sufficient quantity either singly or by interaction with other waste, to contaminate the sludge of the POTW, or to injure or to interfere with any sewage treatment process, or which constitutes a hazard to humans or animals, creates a public nuisance, or creates any hazard in or has an adverse effect on the waters receiving any discharge from the treatment works.

Industrial Waste: any solid, liquid, or gaseous substance or form of energy rejected or escaping in the course of any industrial manufacturing, trade, or business process or in course of the development, recovery or processing of natural resources, as distinct from sanitary sewage.

Infiltration: water or other liquid substances entering the sewer system from either surface or subsurface openings.

Inflow: water or other liquid substances entering the sewer system through engineered means.

Inspector: the District's representative making observations, measurements, samplings, and tests within the terms of these Standards & Specifications.

Lateral: that part of the sewer system extending from a sewer to the property line; or, if no such lateral shall be provided, then it is that portion of, or in place, a sewer which is provided for connection of any customer service line.

Manager or General Manager: General Manager of the Jefferson County Public Service District.

May: permissive (see definition for 'Shall').

Municipality: any city, town, village, county utility district, town sanitary district, and where used in the "Sewer Use Ordinance" shall further mean the municipality which has jurisdiction at the point in question.

MUTCD: Manual on Unified Traffic Control Devices for Streets and Highways.

Natural Outlet: any outlet into a watercourse, pond, ditch, lake, or other body of surface or ground water.

Normal Concentration:

(a) 5-day 20 degree Centigrade, BOD of not more than 500 mg/l.
(b) a suspended solids content of not more than 350 mg/l.

Normal Wastewater: wastewater in which BOD or suspended solids concentration do not exceed normal concentration.

Oil and Grease: any material, but particularly biological lipids and mineral hydrocarbons, recovered as a substance soluble in an organic extracting solvent using an appropriate analytical method approved under 40 CFR 136. It also

includes other material extracted by the solvent from an acidified sample and not volatilized during the extraction procedure.

Operation and Maintenance: costs to the District for the provision of labor, utilities, supplies, equipment maintenance, and other normal costs necessary for the provision of sewer service. "Operation and Maintenance" includes replacement.

Owner: any person vested with ownership, legal or equitable, sole or partial, in any real property.

Person: any individual, firm, company, municipal, or Private Corporation, association, society, institution, enterprise, governmental agency or other entity.

pH: logarithm (base 10) of the reciprocal of the hydrogen ion concentration expressed in moles per liter as determined by "Standard Methods for Examination of Water and Wastewater."

Portland Cement Concrete: Concrete mixes shall comply with WVDOH Specifications.

POTW: Public Owned Treatment Works.

Pollutant: includes dredged spoil, solid waste, junk, sewage sludge, munitions, biological or radiological material, oil, petroleum products or by-products, heat, wrecked or discarded equipment, rock, sand, soil, and industrial, municipal, domestic, commercial, or agricultural waste of any kind.

Polluted Water: water of quality less than the effluent criteria in effect, or water what would cause violation of receiving water quality standards and would be benefited by discharge to the sanitary sewers and wastewater treatment facilities provided.

Properly Shredded Garbage: the wastes from the preparation, cooking and dispersion of food that have been shredded to such a degree that all particles will be carried freely under the flow conditions normally prevailing in public sewers, with no particle greater than one-half (1/2) inch (1.27 centimeters) in any dimension.

Property Line: established right of way limits of any public or private road or street or the common ownership dividing limits between two abutting properties. The limit whereas the building sewer is to connect with the public sewer in a public street or easement.

Public Sewer: a sewer in which a user has equal rights, and is controlled by public authority.

Public Use: any user that is a Municipality as defined herein.
Replacement: expenditures for obtaining and installing equipment, accessories, or appurtenances which are necessary to maintain the capacity and performance during the service life of the collection, transmission or treatment works for which such works were designed and constructed.

Right of Way: an acquired legal right for the specific use of land owned by others.

Sanitary Sewer: a sewer that carries liquid and water-carried wastes from residences, commercial buildings, industrial plants, and institutions together with minor quantities of ground, storm, and surface waters that are not admitted intentionally. Septic tanks installed by the PSD as part of the District's sewer collection system will also be considered as sanitary sewers.

Select Borrow: crushed stone or bank run gravel with a Liquid Limit not to exceed 40 and a Plasticity Index not to exceed 6. The maximum dry weight shall not be less than 115 pounds per cubic foot (pcf) as determined by ASSHTO, T180, Method D.
Service Area: the area served by the Jefferson County Public Service District.

Sewage: the liquid and water-carried domestic or industrial wastes from dwellings, commercial establishments, industrial facilities and institutions, whether treated or untreated. The terms 'waste' and 'wastewater' shall be deemed as sewage by definition.

Sewer: a pipe or conduit for carrying wastewater.

Sewer Service Charge: a charge levied on users of wastewater facilities for the cost of operations, maintenance, and debt service of such facilities. The term operation and maintenance includes replacement. The sewer service charge may also include debt service and other costs related to the wastewater facilities.

Sewer System: all wastewater facilities, owned by the District for collecting, pumping, treating and disposing of sanitary sewage or industrial wastes.

Shall: mandatory; 'May' is permissive.

Significant Industrial User: any industrial user that will contribute greater than 10 percent of the design flow or design pollutant loading of the treatment works.

Slug: any discharge of water or wastewater which in concentration of any given constituent or in quantity of flow exceeds for any period longer than fifteen (15) minutes more than five (5) times the average twenty-four (24) hour concentration or flows during normal operation, and which adversely affects the collection system and/or performance of the wastewater treatment works.

Spill: the non-permitted, accidental or intentional loss or unauthorized discharge of grease interceptor waste, grit interceptor waste, seepage, any other liquid waste, a chemical (hazardous or non-hazardous), or any other material that has the potential to contaminate any surface or ground water or in any other manner such that the waste is not duly and legally disposed.

Storm Sewer: a sewer which carries storm and surface waters and drainage, but excludes wastewater and industrial wastes, other than polluted cooling water.

Subgrade: the top one-foot of excavation. Within paved areas the material shall comply with the following:

- Liquid Limit not to exceed 40.
- Plasticity Index not to exceed 12.
- The maximum dry weight shall not be less than 105 pounds per cubic foot (pcf) as determined by AASHTO, T-99, Method C and shall be compacted to 100% of maximum dry density.

Superintendent: the individual retained or designated by the District or by the Builder's, Developer's or District's Contractor to supervise and oversee the operation and maintenance of the wastewater collection and treatment facilities.

Suspended Solids: total suspended matter that either floats on the surface of, or is suspension in water, wastewater, or other liquids, and that is removable by laboratory filtering as prescribed in "Standard Methods for Examination of Water and Wastewater" and referred to as non-filterable residue.

TCP: Traffic Control Plan.

TSS: Total Suspended Solids.

Unpolluted Water: water of quality equal to or better than the effluent criteria in effect or water that would not cause violation of receiving water quality standards and would not be benefited by discharge to the sanitary sewers and wastewater treatment facilities provided.

User: owner of real estate, which is connected to the District's sanitary sewer system.

Utility Patch: a roadway repair required as the result of excavation in the subgrade to install or repair a sewer line or appurtenance.

Waste: the liquid and water-carried domestic or industrial wastes from dwellings, commercial establishments, industrial facilities and institutions, whether treated or untreated. The terms 'sewage' and 'wastewater' shall be deemed as waste by definition.
Wastewater: the spent water of the community. From the standpoint of source, it may be a combination of the liquid and water-carried wastes from residences, commercial buildings, industrial plants, and institutions, together with any ground water, surface water, and storm water that may be present.

Wastewater Facilities: the structures, equipment, and processes required to collect, carry away and treat domestic and industrial wastes and dispose of the effluent.

Wastewater Treatment Works: an arrangement of devices and structures for treating wastewater, industrial wastes, and sludge. Sometimes used as synonymous with "wastewater treatment plant" or "water pollution control plant."

Watercourse: a natural or artificial channel for the passage of waters either continuously or intermittently.

* Many definitions were taken from the **Sewer Use Ordinance**. *

STANDARD DETAILS AND DRAWINGS

Drawing Number	
S-1	Typical Pipe Trench Detail and Legend
S-2	Trench Type A S-3
	Trench Type B
S-4	Trench Type C
S-5	Trench Type A, B, & C
S-6	Type D Trench, Shoulders & Ditches
S-7	Concrete Sidewalk Replacement
S-8	Precast Manhole (4' Diameter)
S-9	Precast Manhole (4' Diameter)
S-10	Standard Drop Manhole
S-10A	Inside Drop
S-11	Precast Manhole (6' Diameter)
S-12	Joint Detail
S-13	Force Main to Gravity
S-14	Concrete Anchor
S-15	Typical Bench and Flow Channel
S-16	Flow Channels
S-17	Approved Manhole Frames and Covers for 4' Manhole
S-18	Typical Manhole Step
S-19	Manhole Pipe Connections
S-20	Future Connections
S-21	Conventional Gravity Sewer Service Lateral
S-22	Typical Gravity Sewer Cleanout

S-23 Clean-Out Adaptor & Plug
S-24 Connection to Existing Gravity Sewer Mains
S-25 Low Pressure (Grinder Pump) Sewer Service Lateral
S-26 Typical Simplex Grinder Pump Station
S-27 Low Pressure Sewer Service Connection
S-28 Low Pressure Service Connection to Gravity Main
S-29 Terminal Flushing Connection Low Pressure Sewer
S-30 Flushing Connection Low Pressure Sewer
S-31 Air Release & Vacuum Valve Pit
S-32 Air Valve Detail
S-33 Valve Box Installation S-34 Typical Casing & Plug
S-35 Railway and Highway Road Bore and Jack/Open Cut

S-36 Typical Casing End Section
S-37 Casing Pipe Thickness
S-38 Typical Road Crossing Sections
S-39 Typical Stream Crossing
S-40 Typical Creek Slope Riprap
S-41 Typical Blocking For Horizontal Thrust
S-42 Typical Blocking Vertical Thrust Downwards and Upwards
S-43 Horizontal Thrust Restraint
S-44 Vertical Thrust Restraint
S-45 Thrust Support & Adhesive Anchor
S-46 Pump Station – Control Panel Shelter

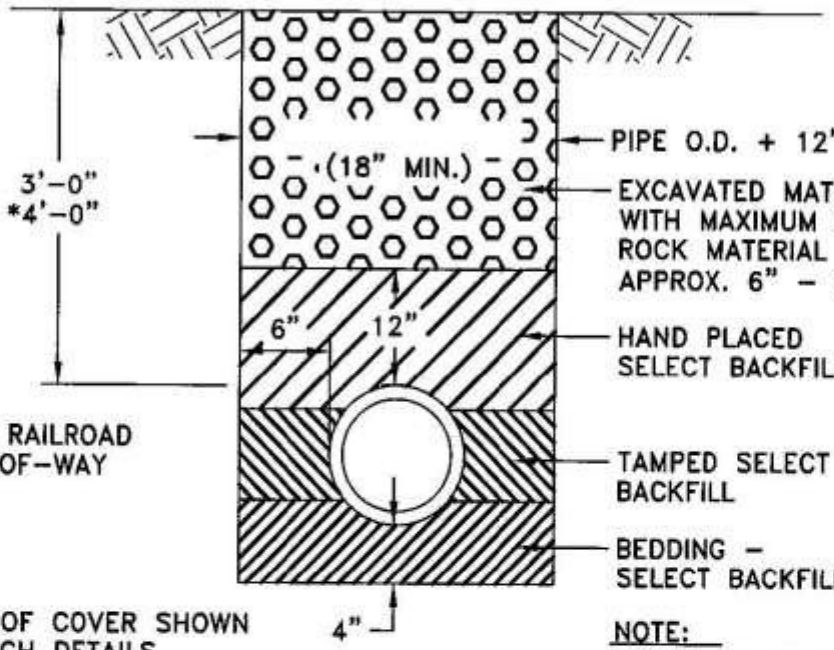

* WITHIN RAILROAD RIGHT–OF–WAY

NOTE:
THE DEPTHS OF COVER SHOWN ON ALL TRENCH DETAILS ARE MINIMUM DEPTHS

NOTE:
LIMESTONE SAND MAY BE USED IF SELECTED BACKFILL IS NOT AVAILABLE

NO SCALE

JEFFERSON COUNTY, WEST VIRGINIA	APPROVED: JCPSD General Manager	TYPICAL PIPE TRENCH DETAIL	REVISION DATES 05-27-2009	DETAIL DETAIL S1

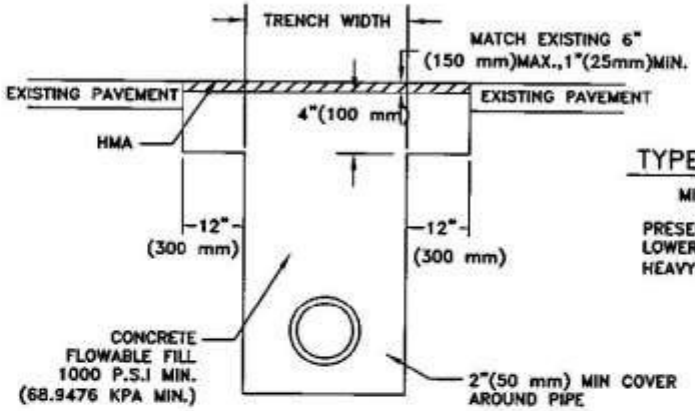

TYPE A TRENCH

MIX PAVEMENT

PRESENT ADT OVER 2000 OR LOWER-VOLUME ROADS WITH HEAVY TRUCK TRAFFIC (20 PER DAY)

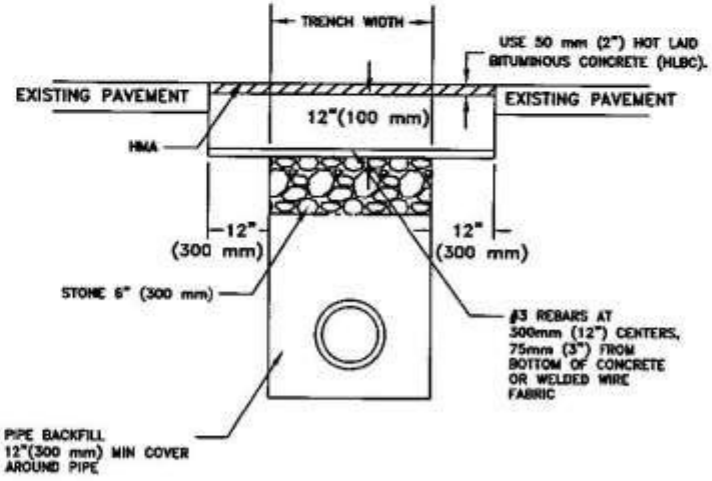

DETAIL	DETAIL S-2
REVISION DATES	05-27-2009
TRENCH TYPE A	
APPROVED:	JCPSD GENERAL MANAGER
JEFFERSON COUNTY, WEST VIRGINIA	

TYPE B TRENCH

HMA PAVEMENT

PRESENT ADT UNDER 2000 UNLESS HEAVY TRUCK TRAFFIC DEFINED AS 20 TANDEM-AXLE TRUCKS PER DAY, IS EVIDENT.

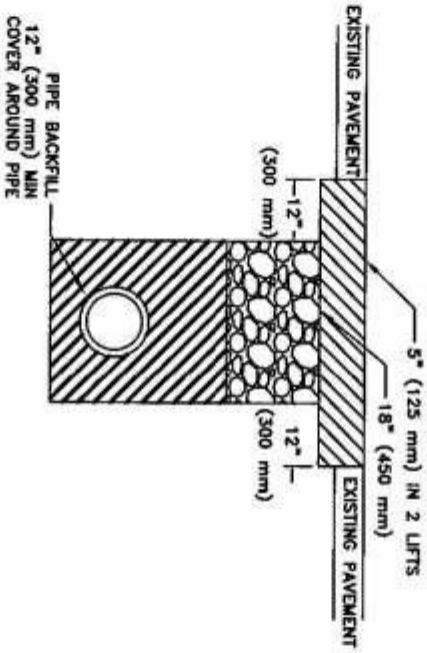

JEFFERSON COUNTY, WEST VIRGINIA	APPROVED: JCPSD GENERAL MANAGER	TRENCH TYPE B	REVISION DATES 05-27-2009	DETAIL DETAIL S-3

TYPE C TRENCH

STONE ROADWAY

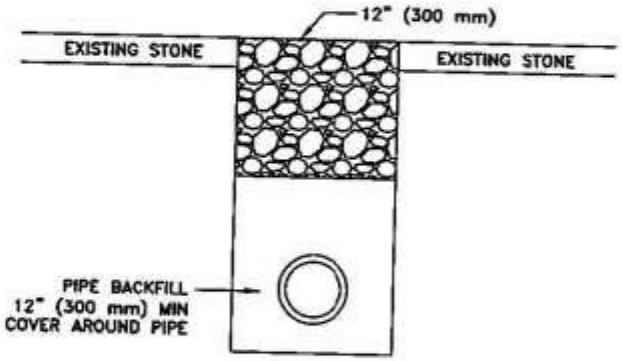

DETAIL

DETAIL S-4

REVISION DATES

05-27-2009

TRENCH TYPE C

APPROVED:

JCPSD GENERAL MANAGER

JEFFERSON COUNTY, WEST VIRGINIA

CONCRETE TO BE ROUGH FOR
BONDING OF HMA

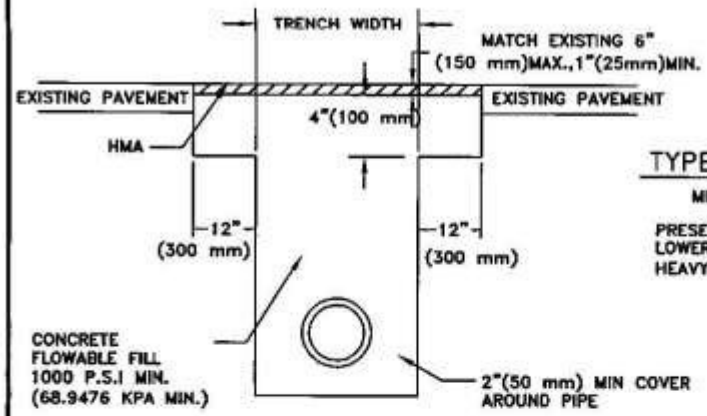

TYPE A TRENCH

MIX PAVEMENT

PRESENT ADT OVER 2000 OR LOWER-VOLUME ROADS WITH HEAVY TRUCK TRAFFIC (20 PER DAY)

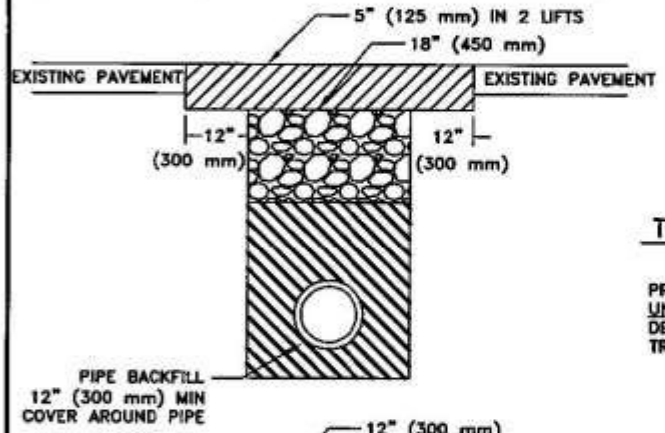

TYPE B TRENCH

HMA PAVEMENT

PRESENT ADT UNDER 2000 UNLESS HEAVY TRUCK TRAFFIC DEFINED AS 20 TANDEM-AXLE TRUCKS PER DAY, IS EVIDENT.

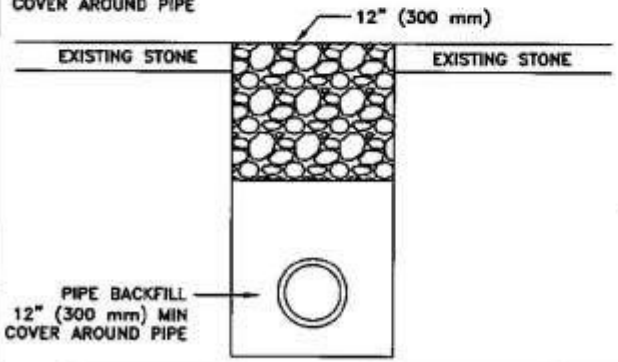

TYPE C TRENCH

STONE ROADWAY

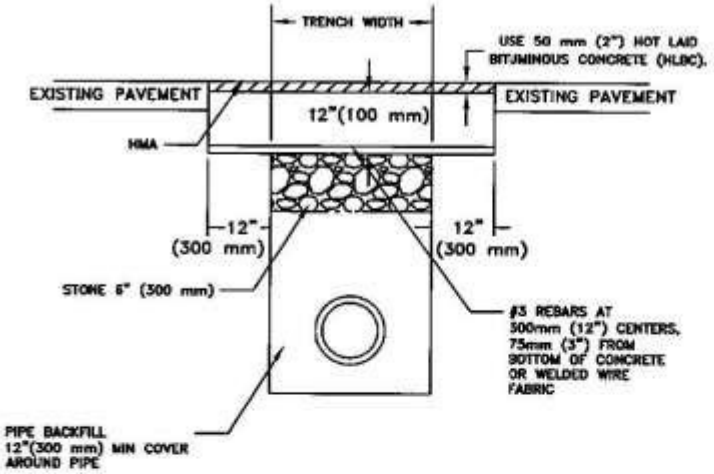

NOTES:

1. WHERE TYPE A TRENCHES ARE WIDER THAN 7" IN EXISTING BITUMINOUS PAVEMENT, CONCRETE MAY BE DELETED IF EXISTING HMA THICKNESS AND 18" STONE ARE RESTORED.

2. TRAFFIC IS TO BE MAINTAINED AT ALL TIMES BY THE USE OF APPROPRIATE TRAFFIC CONTROL DEVICES. USE OF METAL PLATES, HAVING SUFFICIENT RIGIDITY TO SPAN TYPE A TRENCH, IS REQUIRED TO PREVENT WHEEL LOADS FROM BEING TRANSMITTED TO THE CONCRETE FLOWABLE FILL. THE PLATES SHALL BE SECURELY ANCHORED TO PREVENT TO PREVENT MOVEMENT CAUSED BY TRAFFIC. THE PLATES ARE TO BE LEFT IN PLACE UNTIL THE CONCRETE FLOWABLE FILL HAS ATTAINED AT LEAST 50% OF IT'S COMPRESSIVE STRENGTH.

DETAIL

DETAIL S-5

REVISION DATES

05-27-2009

TRENCH TYPE A,B, & C

APPROVED:

JCPSD GENERAL MANAGER

JEFFERSON COUNTY, WEST VIRGINIA

TYPE D TRENCH
CONCRETE PAVEMENT

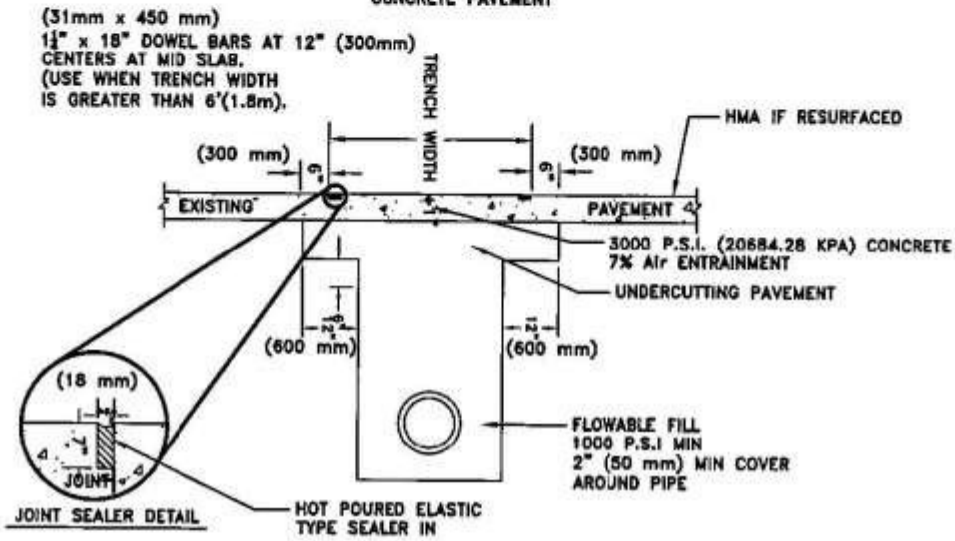

JOINT SEALER DETAIL

NOTES:

TRAFFIC IS TO BE MAINTAINED AT ALL TIMES BY THE USE OF APPROPRIATE TRAFFIC CONTROL DEVICES. USE OF METAL PLATES, HAVING SUFFICIENT RIGIDITY TO SPAN THE TRENCH, IS REQUIRED TO PREVENT WHEEL LOADS FROM BEING TRANSMITTED TO THE CONCRETE. THE PLATES ARE TO BE SECURELY ANCHORED TO PREVENT MOVEMENT CAUSED BY TRAFFIC. THE PLATES ARE TO BE LEFT IN PLACE UNTIL THE FLOWABLE FILL HAS ATTAINED 50% OF IT'S COMPRESSIVE STRENGTH.

JEFFERSON COUNTY, WEST VIRGINIA	APPROVED:	TYPE D TRENCH SHOULDERS & DITCHES	REVISION DATES	DETAIL
			05-27-2009	DETAIL S-6
	JCPSD GENERAL MANAGER			

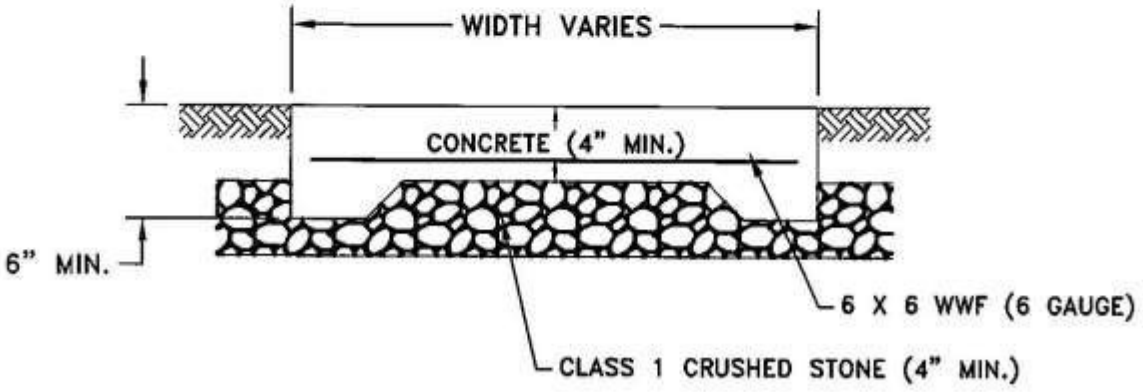

NO SCALE

JEFFERSON COUNTY, WEST VIRGINIA	APPROVED: JCPSD GENERAL MANAGER	CONCRETE SIDEWALK REPLACEMENT	REVISION DATES 05-27-2009	DETAIL DETAIL S-7

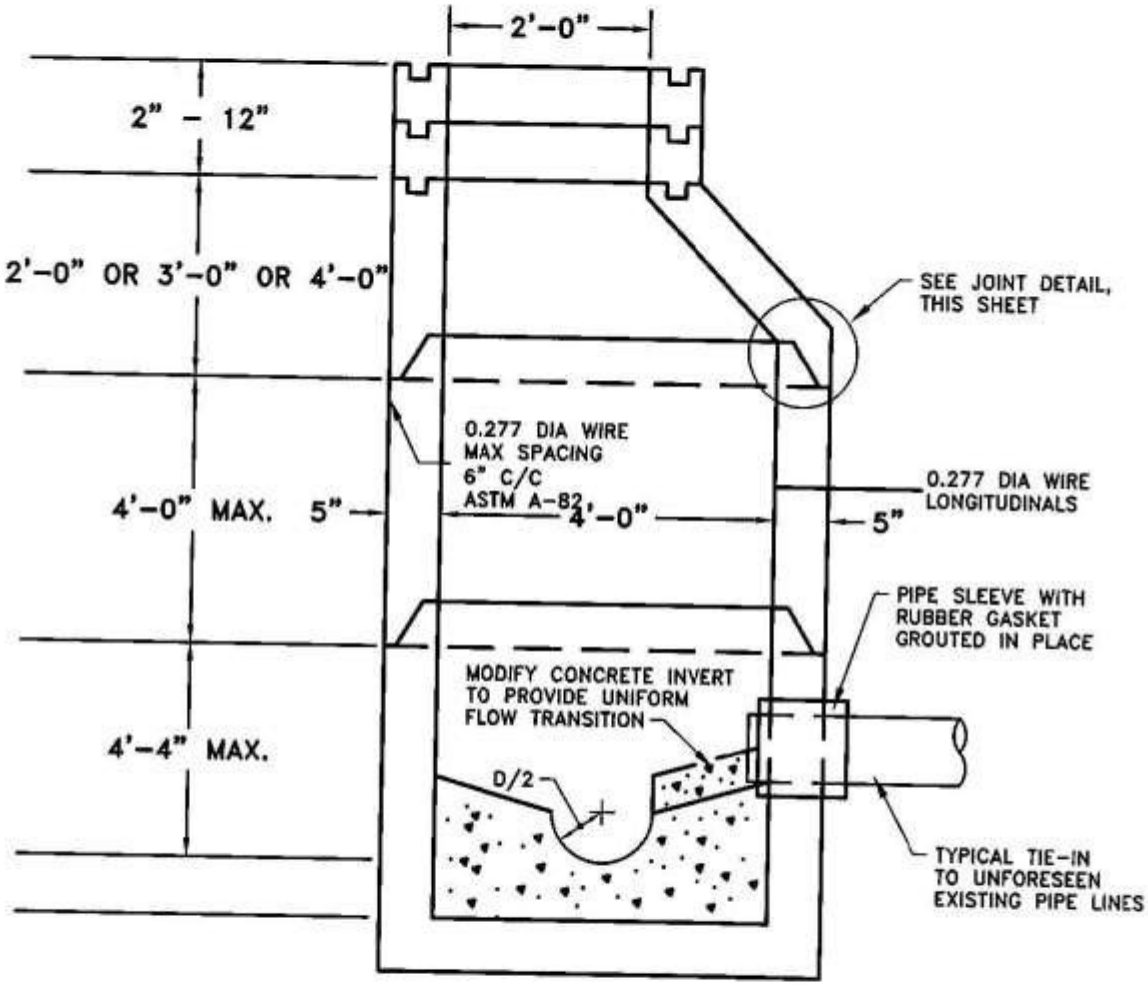

NOTE:
ALL PROPOSED AND EXISTING LINES SHOWN ON PLANS ARE TO BE PLACED THROUGH PRE-CAST RUBBER BOOTS

SECTION A - A

NO SCALE

JEFFERSON COUNTY, WEST VIRGINIA	APPROVED: JCPSD GENERAL MANAGER	**PRECAST MANHOLE**	REVISION DATES 05-27-2009	DETAIL DETAIL S-8

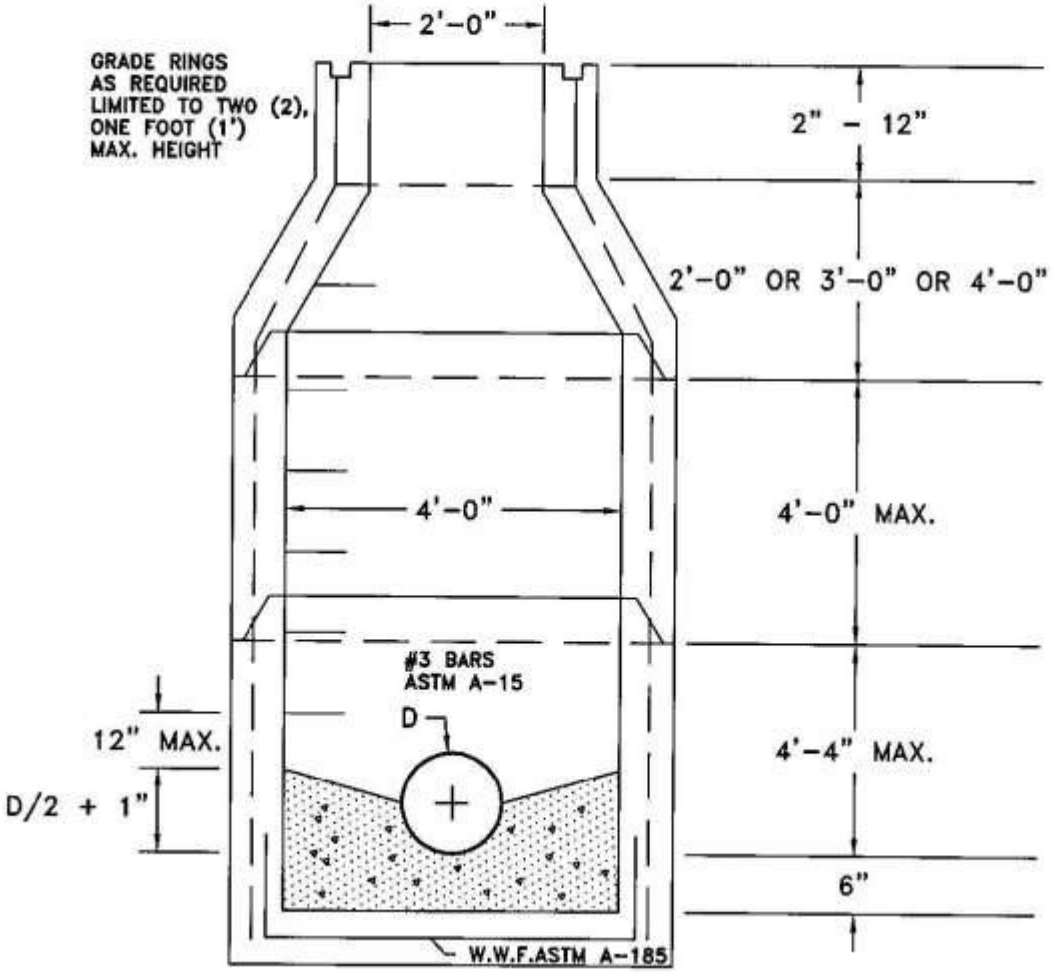

SECTION B - B

NO SCALE

JEFFERSON COUNTY, WEST VIRGINIA	APPROVED:	PRECAST MANHOLE	REVISION DATES	DETAIL
			05-27-2009	DETAIL S-9
	JCPSD GENERAL MANAGER			

NOTES:
1. PRECAST MUST MEET ASTM-C478
2. ALL JOINTS TO BE MASTIC OR O-RING
3. CONCRETE STRENGTH 4000 PSI MIN.

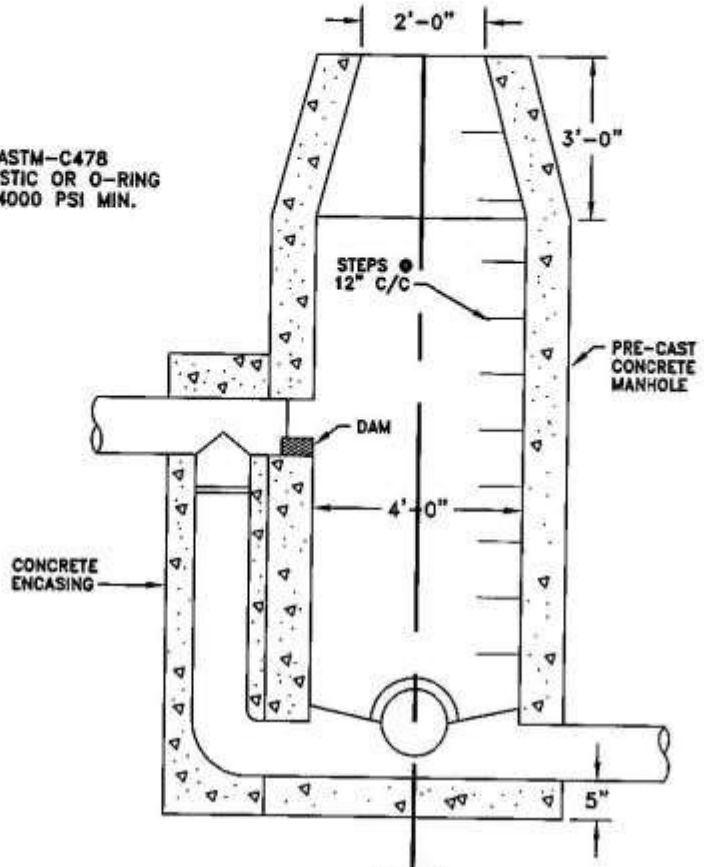

NOTES:
PRE-CAST OUTSIDE DROP MANHOLES ARE AN ACCEPTABLE ALTERNATE TO CAST-IN-PLACE DROP MANHOLES.

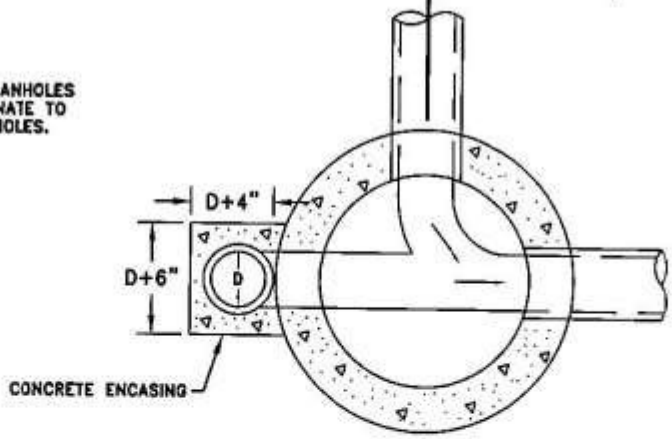

NO SCALE

JEFFERSON COUNTY, WEST VIRGINIA	APPROVED: JCPSD GENERAL MANAGER	STANDARD DROP MANHOLE	REVISION DATES 05-27-2009	DETAIL DETAIL S-10

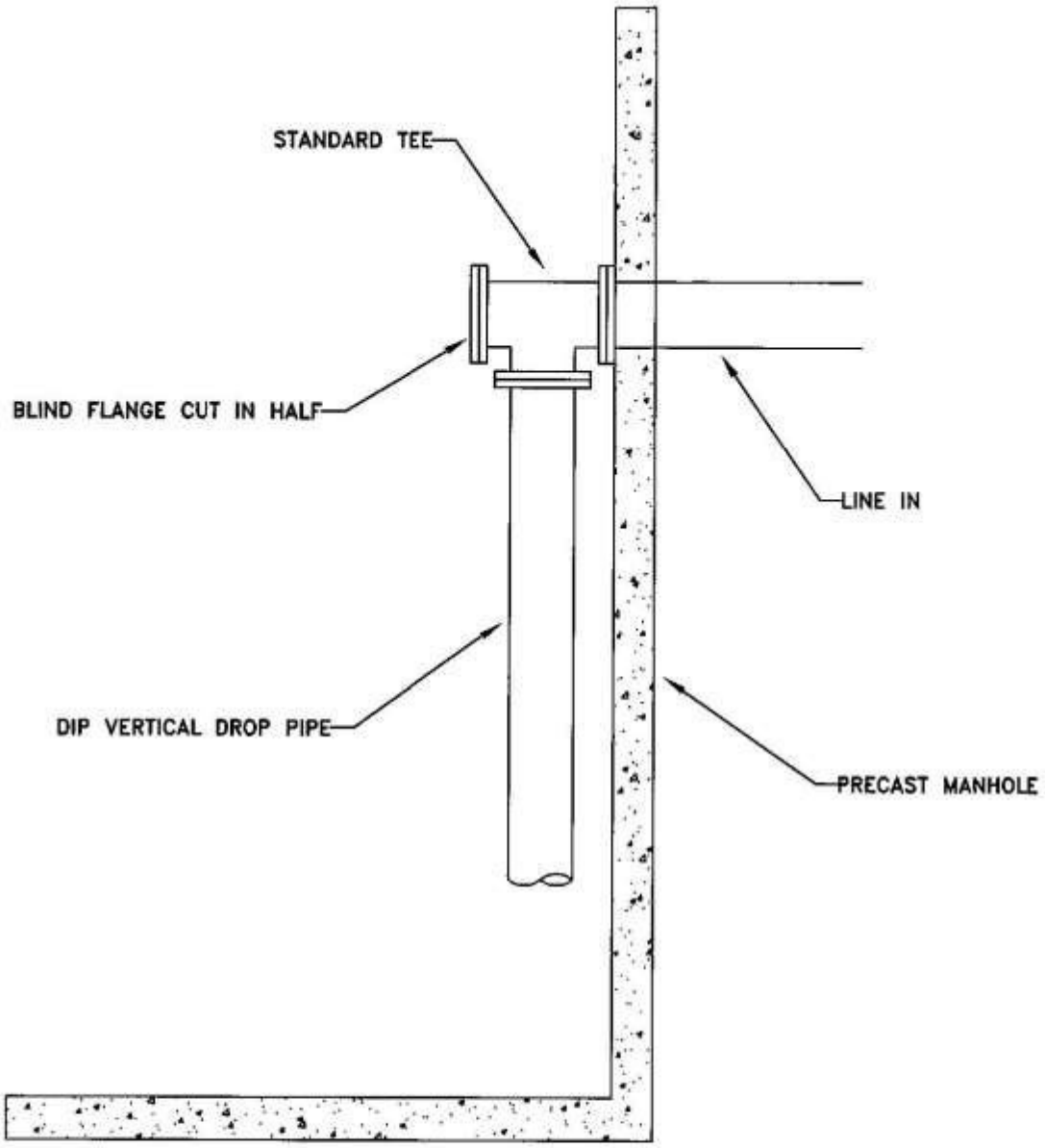

NO SCALE

JEFFERSON COUNTY, WEST VIRGINIA	APPROVED: JCPSD GENERAL AMNAGER	**INSIDE DROP**	REVISION DATES 05-27-2009	DETAIL DETAIL S-10A

NOTES:

1. PRECAST MUST MEET ASTM-C478
2. ALL JOINTS TO BE MASTIC OR O-RING
3. CONCRETE STRENGTH 4000 PSI MIN.

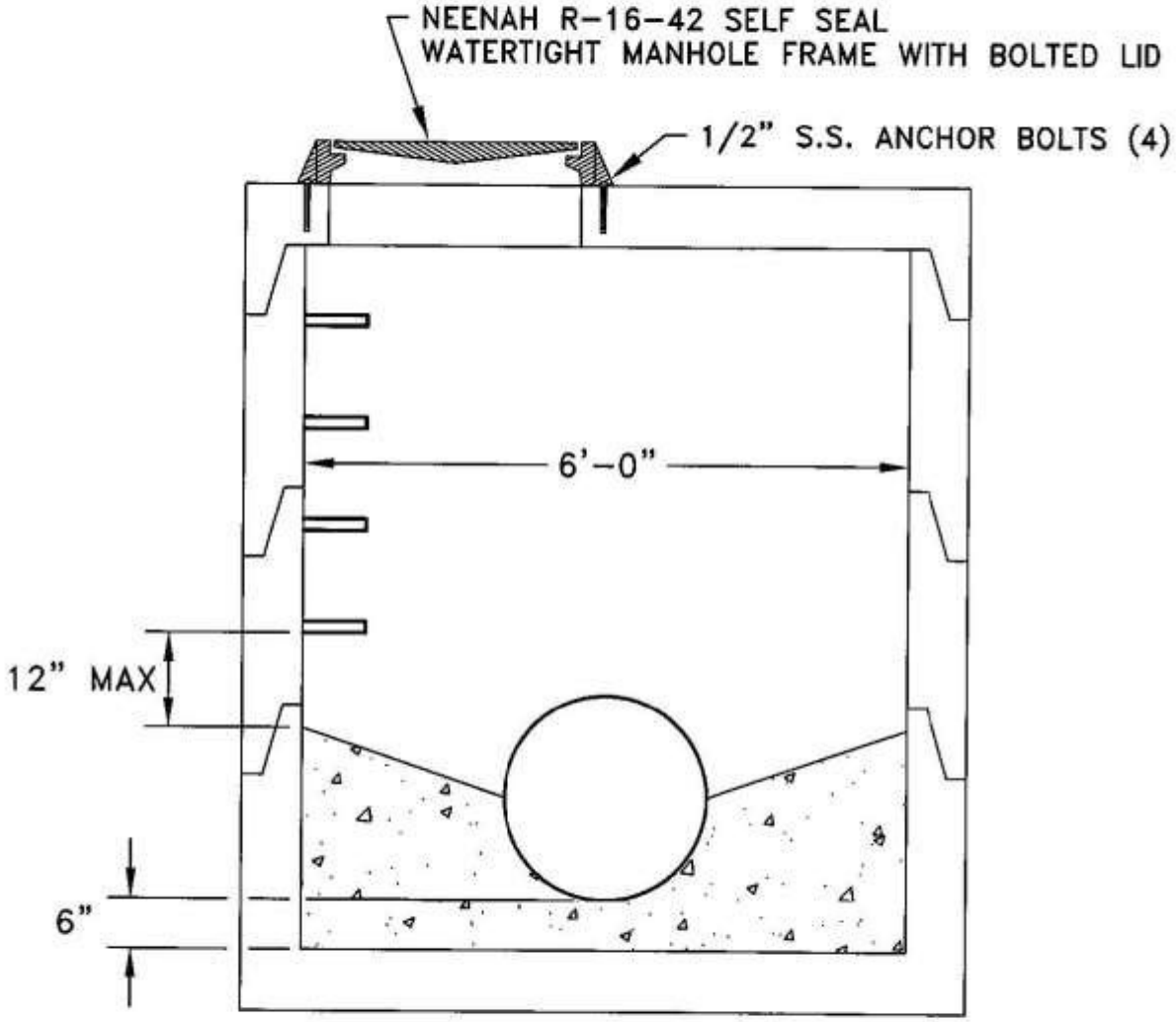

6' DIA. MANHOLE (FOR 18" TO 36" PIPE)

NO SCALE

JEFFERSON COUNTY, WEST VIRGINIA	APPROVED: JCPSD GENERAL MANAGER	PRECAST MANHOLE	REVISION DATES 05-27-2009	DETAIL DETAIL S-11

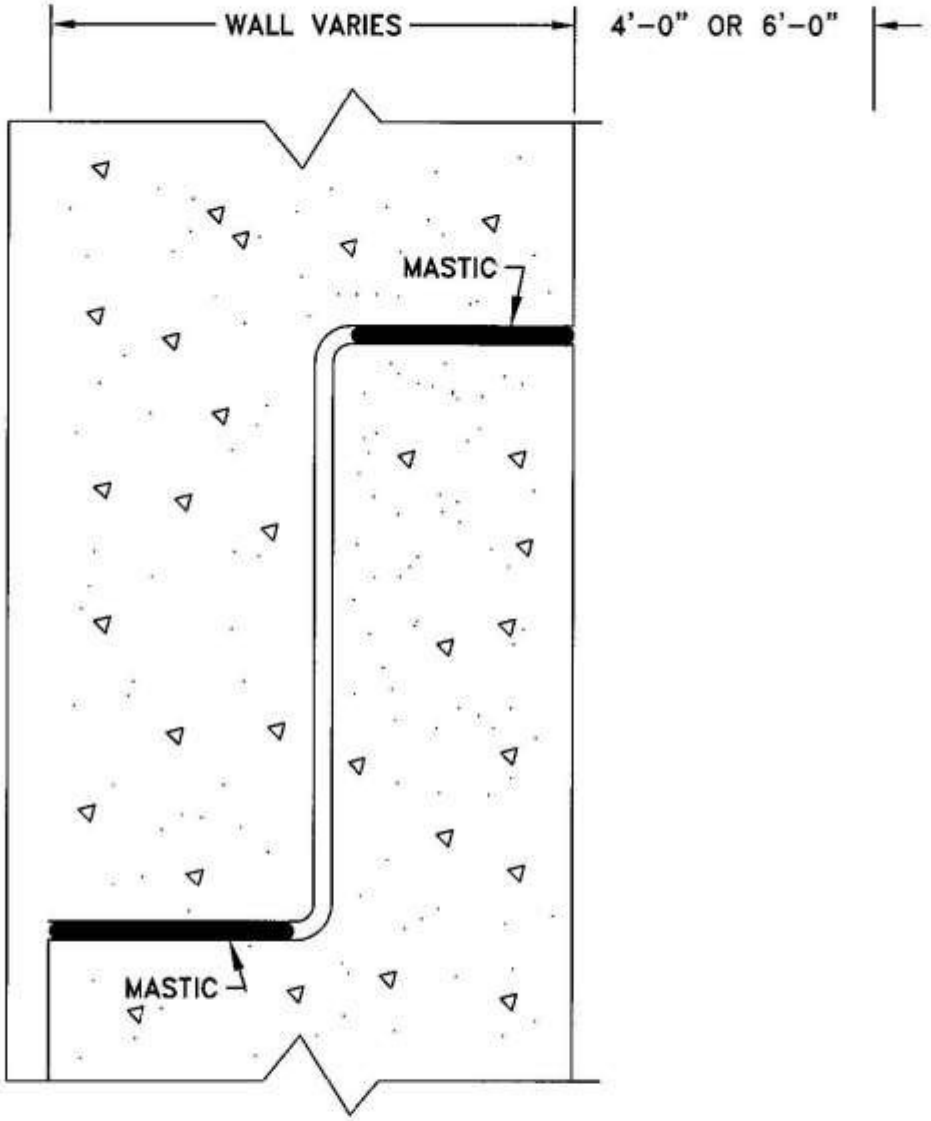

NO SCALE

JEFFERSON COUNTY, WEST VIRGINIA	APPROVED: JCPSD GENERAL MANAGER	JOINT DETAIL	REVISION DATES 05-27-2009	DETAIL DETAIL S-12

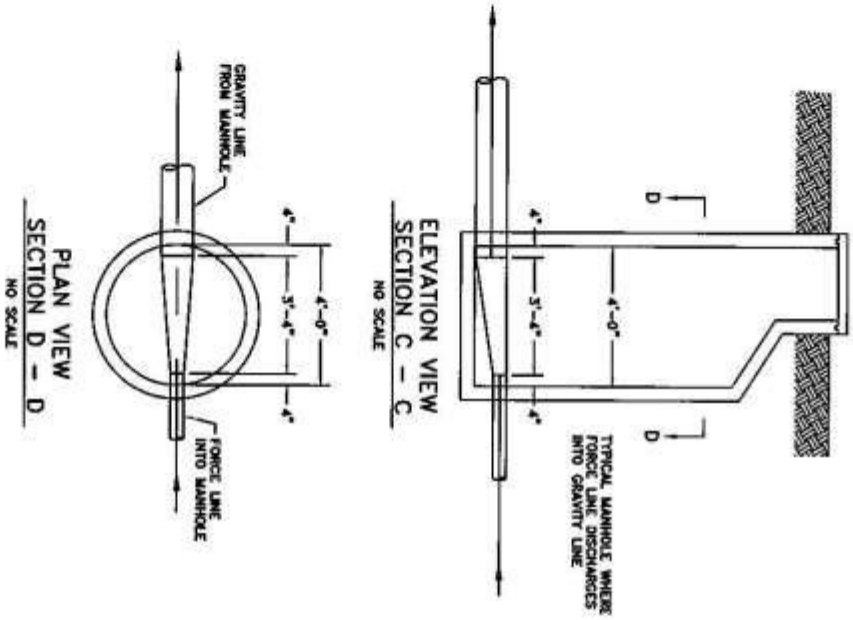

JEFFERSON COUNTY, WEST VIRGINIA	APPROVED:	FORCE MAIN TO GRAVITY	REVISION DATES	DETAIL
			05-27-2009	DETAIL S-13
	JCPSD GENERAL MANAGER			

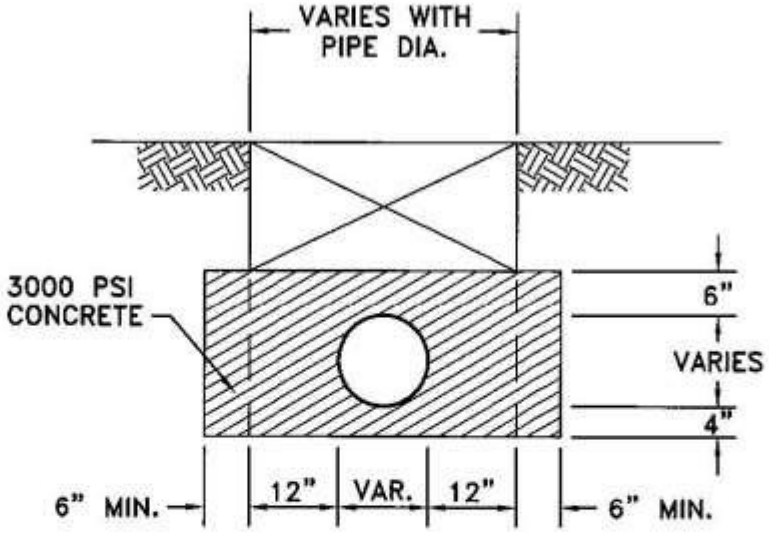

SECTION

SCALE: 1/2" = 1'-0"

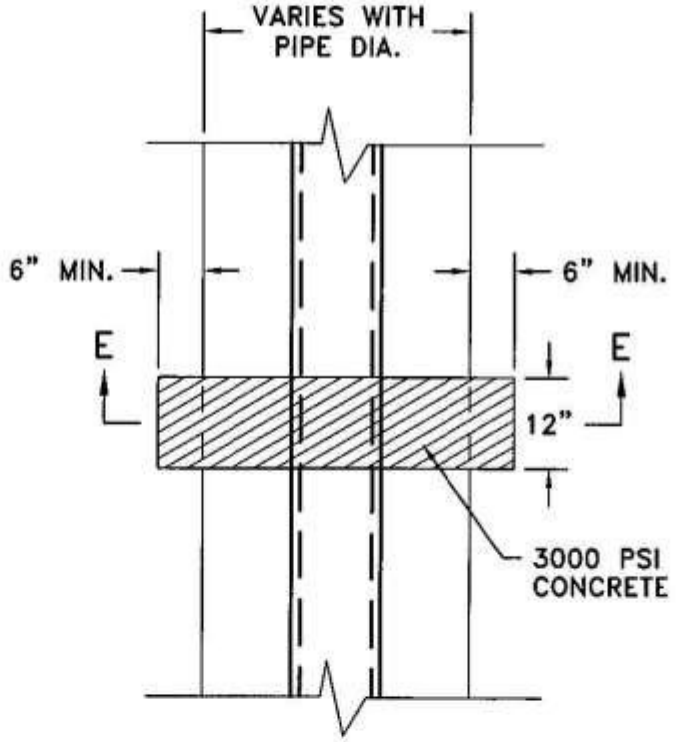

PLAN VIEW

SCALE: 1/2" = 1'-0"

JEFFERSON COUNTY, WEST VIRGINIA	APPROVED: JCPSD GENERAL MANAGER	CONCRETE ANCHOR	REVISION DATES 05-27-2009	DETAIL DETAIL S-14

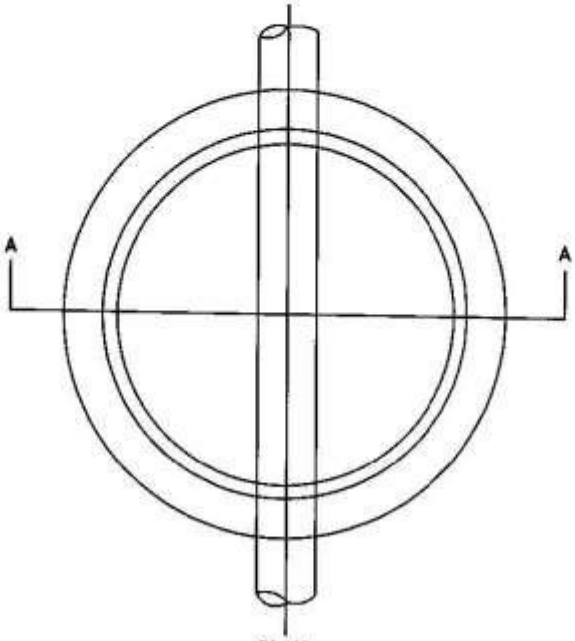

PLAN

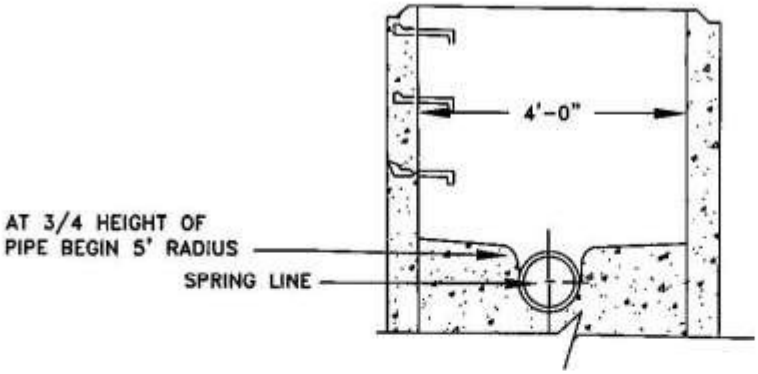

SECTION A-A

NOTES:
1. ALL BENCHES SLOPE AT 1/3"/FT. TOWARD FLOW CHANNEL
2. FLOW CHANNELS SHALL NOT HAVE LESS THAN 1-1/4" DROP FROM INVERT IN TO INVERT OUT

JEFFERSON COUNTY, WEST VIRGINIA	APPROVED:	TYPICAL BENCH AND FLOW CHANNEL SECTION	REVISION DATES	DETAIL
			05-27-2009	DETAIL S-15
	JCPSD GENERAL MANAGER			

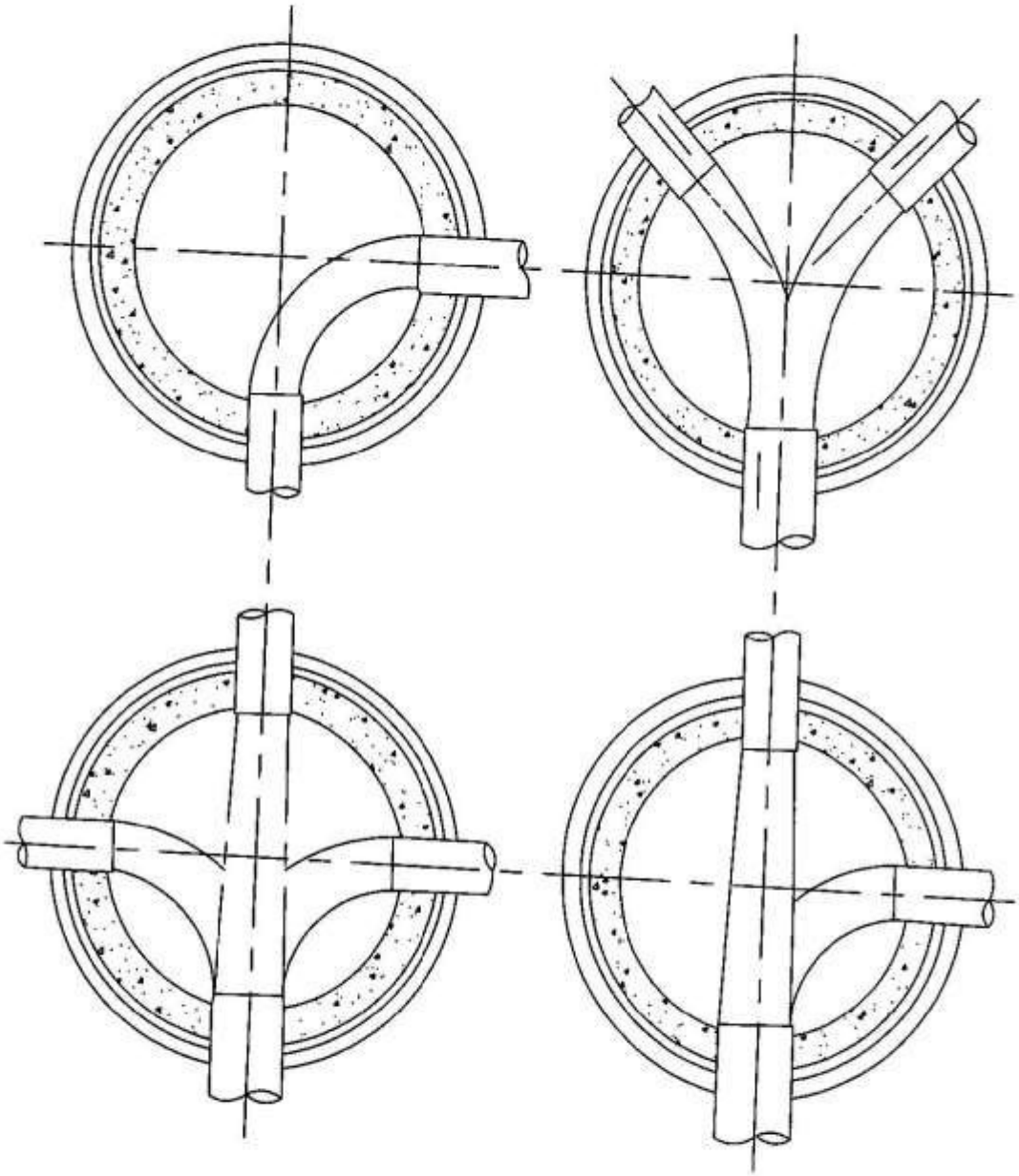

JEFFERSON COUNTY, WEST VIRGINIA	APPROVED:	**PLANS OF FLOW CHANNELS TYPICAL**	REVISION DATES 05-29-2009	DETAIL DETAIL S-16
	JCPSD GENERAL MANAGER			

CAPITOL FOUNDRY OF VA, INC.

2856 CRUSADER CIRCLE
VIRGINIA BEACH, VA 23453
PHONE: (757) 427-9431
FAX: (757) 427-9308
EMAIL: capitolfoundry@hotmail.com

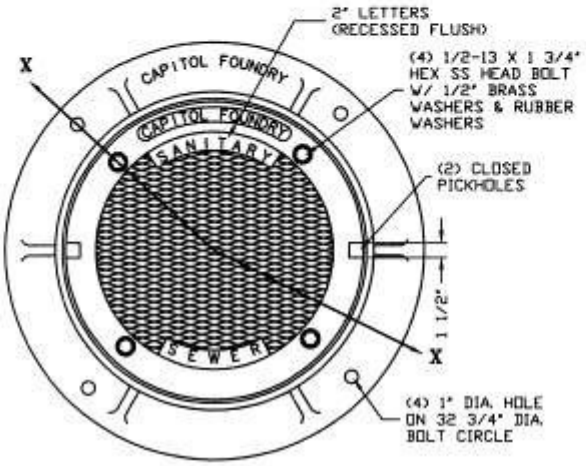

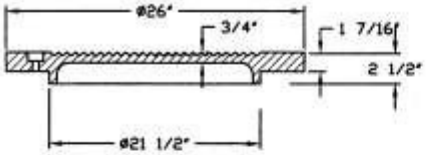

COVER SECTION X-X

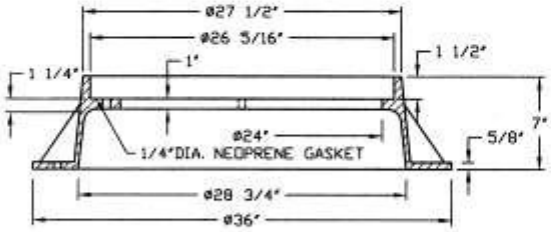

FRAME SECTION X-X

AVAILABLE MADE IN USA

STANDARD 24" BOLTED WATERTIGHT MANHOLE FRAME & COVER

MATERIAL SPEC: GRAY IRON ASTM-A48 CLASS 35B	**ITEM #MH-1678*JC-WT**

January 21, 2016

1040APT 1045ZPT Assembly

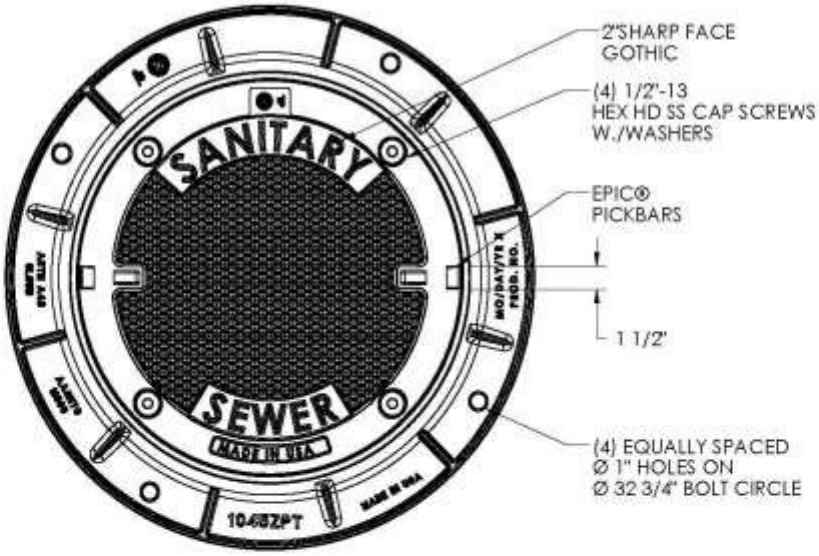

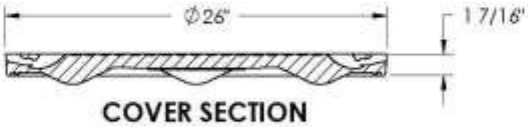

COVER SECTION

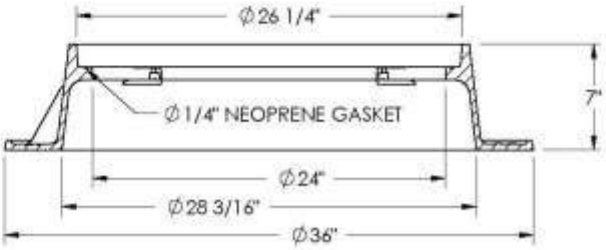

FRAME SECTION

Product Number
00104509

Design Features
-Materials
Cover
Gray Iron (CL35B)
Frame
Gray Iron (CL35B)

-Design Load
Heavy Duty
-Open Area
n/a
-Coating
Dipped
-√ Designates Machined Surface

Certification
-ASTM A48
-
-
-Country of Origin: USA

Major Components
00104174
00104512

Drawing Revision
9/1/2009 Designer: DVDS-VP
06/06/2013 Revised By: DAE

Disclaimer
Weights (lbs/kg), dimensions (inches/mm) and drawings provided for your guidance. We reserve the right to modify specifications without prior notice.

CONFIDENTIAL: This drawing is the property of EJ Group, Inc. and embodies confidential information, registered marks, patents, trade secret information, and/or know-how that is the property of EJ Group, Inc. Copyright © 2012 EJ Group, Inc. All rights reserved.

Contact
800 626 4653
ejco.com

SECTION BB – BB

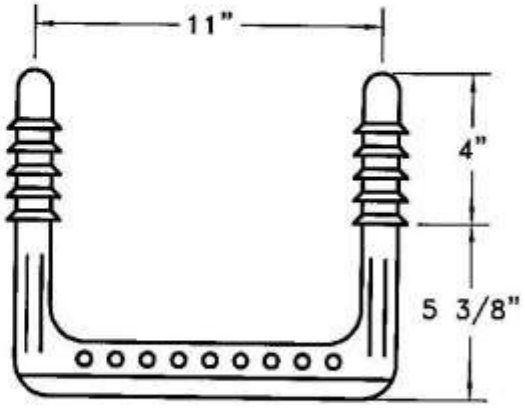

PLAN VIEW

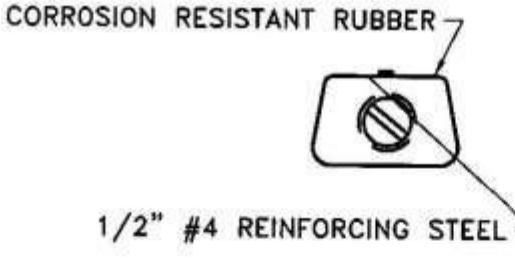

SECTION AA – AA

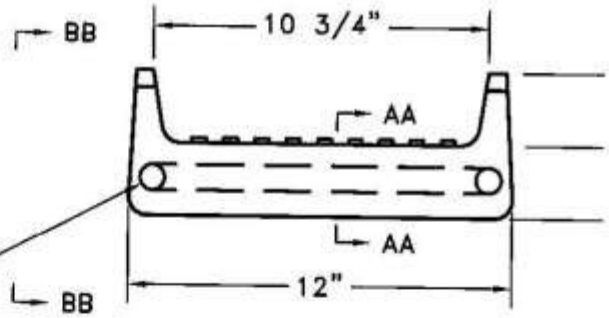

ELEVATION VIEW

NO SCALE

JEFFERSON COUNTY, WEST VIRGINIA	APPROVED: JCPSD GENERAL MANAGER	**TYPICAL MANHOLE STEP**	REVISION DATES 05-27-2009	DETAIL DETAIL S-18

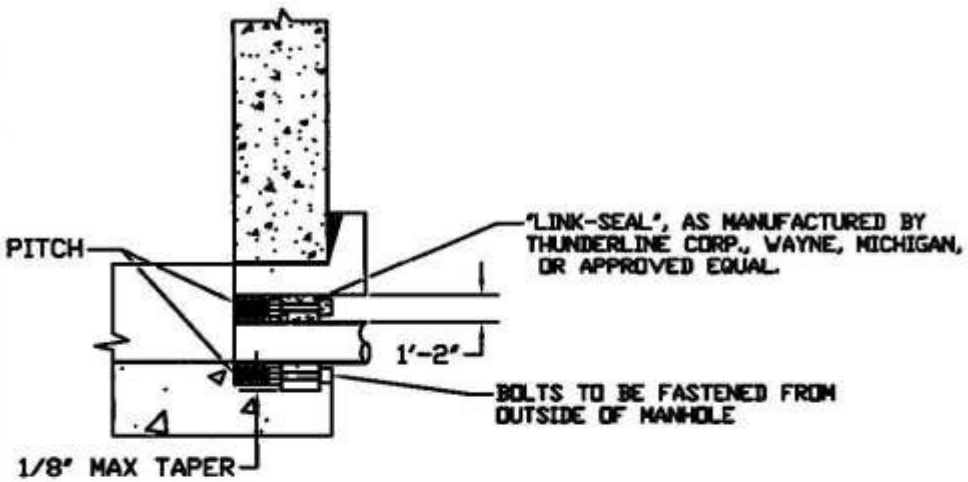

FLEXIBLE MANHOLE CONNECTION

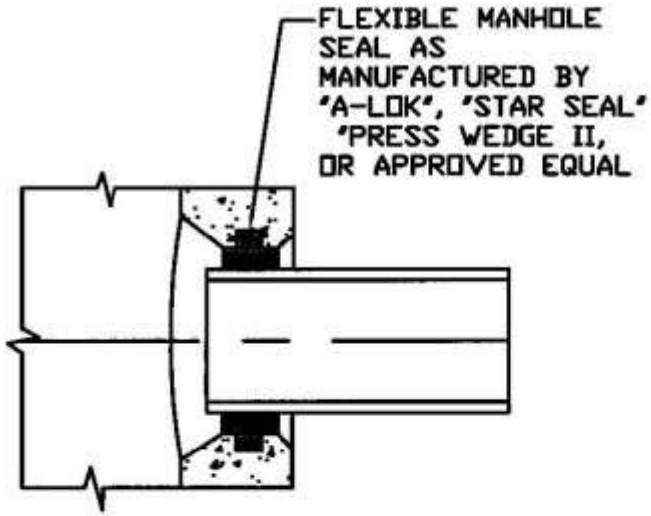

PRECAST BASE WITH PIPE TO MANHOLE SEAL

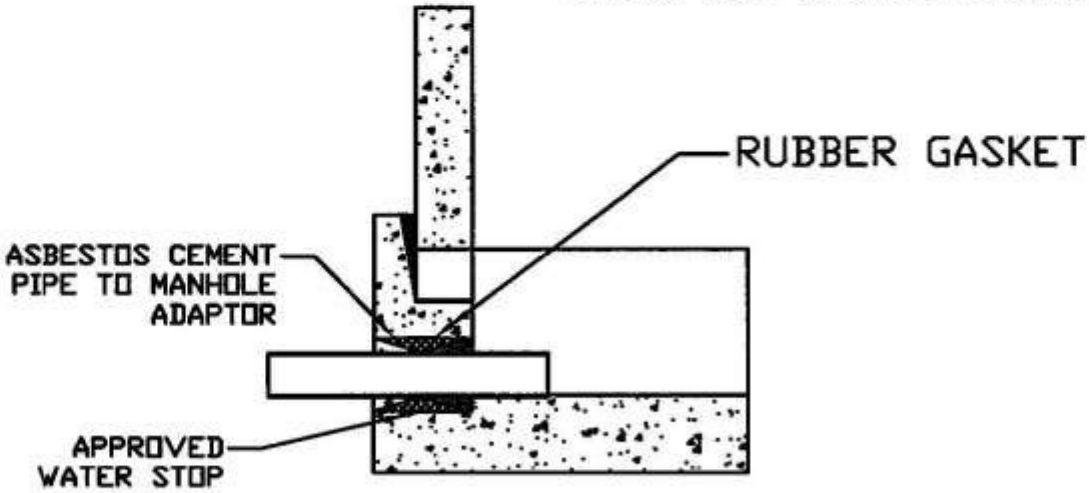

CAST IN PLACE BASE OR FUTURE CONNECTION

DETAIL

DETAIL S-19

REVISION DATES

05-27-2009

MANHOLE PIPE CONNECTIONS

APPROVED:

JCPSD GENERAL MANAGER

JEFFERSON COUNTY, WEST VIRGINIA

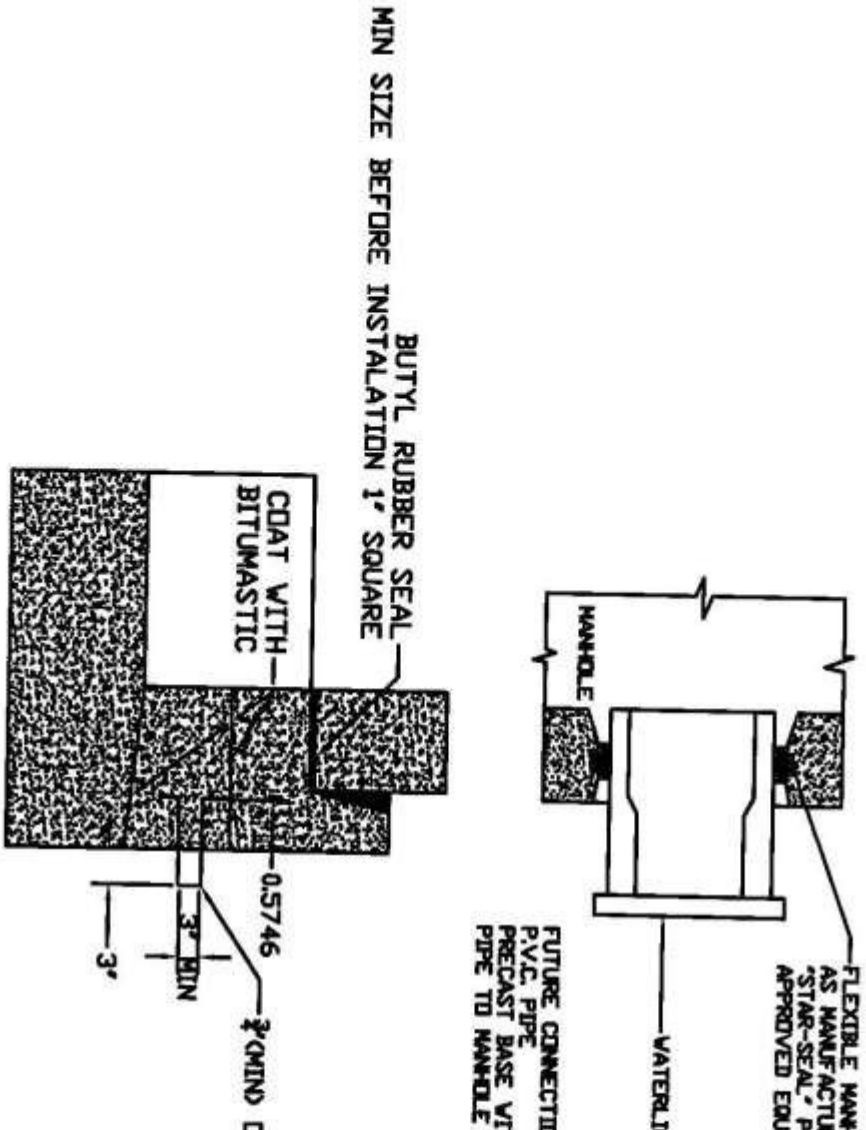

JEFFERSON COUNTY, WEST VIRGINIA	APPROVED: JCPSD GENERAL MANAGER	**FUTURE CONNECTION**	REVISION DATES 05-27-2009	DETAIL DETAIL S-20

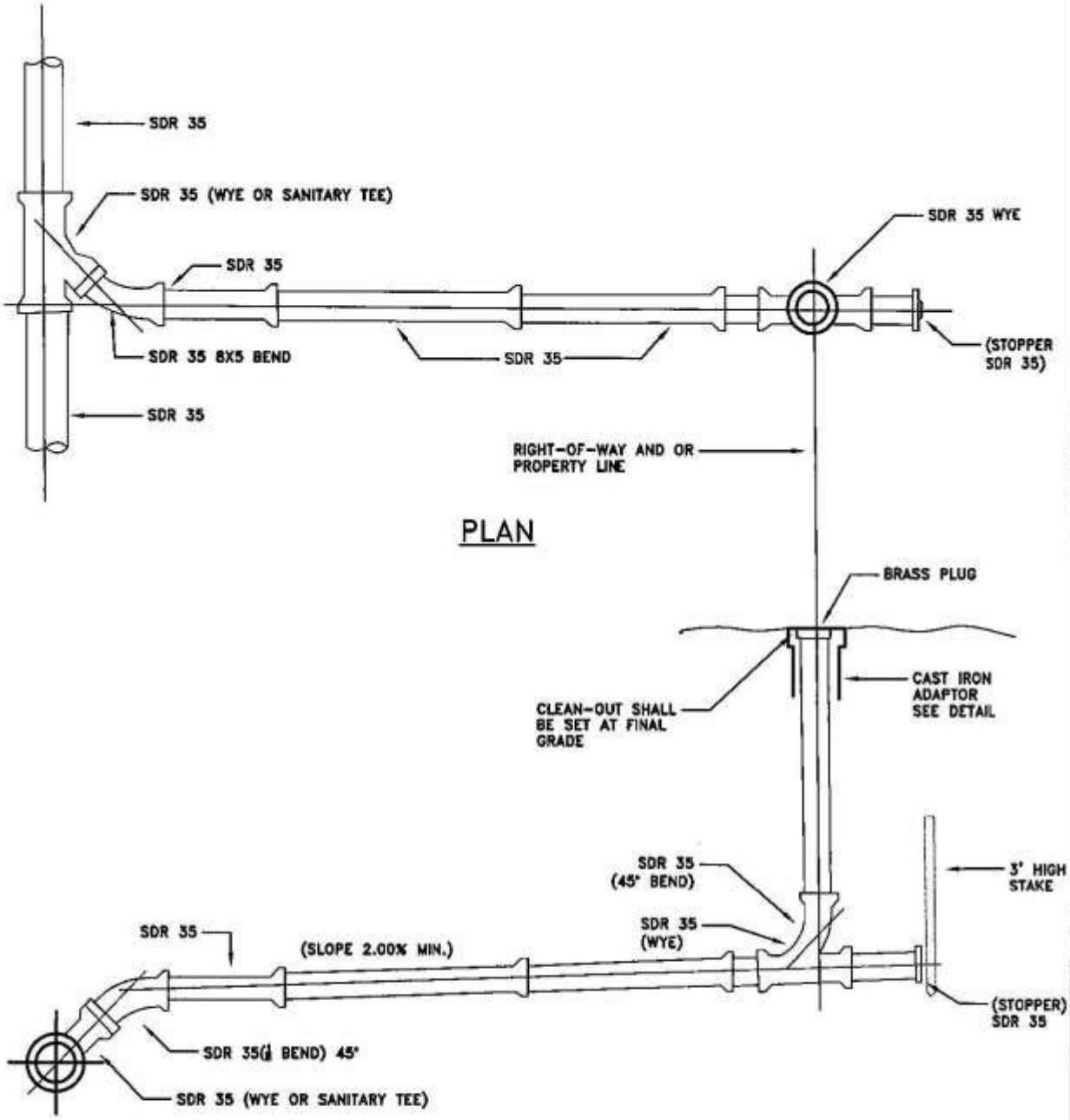

JEFFERSON COUNTY, WEST VIRGINIA	APPROVED: JCPSD GENERAL MANAGER	CONVENTIONAL GRAVITY SEWER SERVICE LATERAL	REVISION DATES 05-27-2009	DETAIL DETAIL S-21

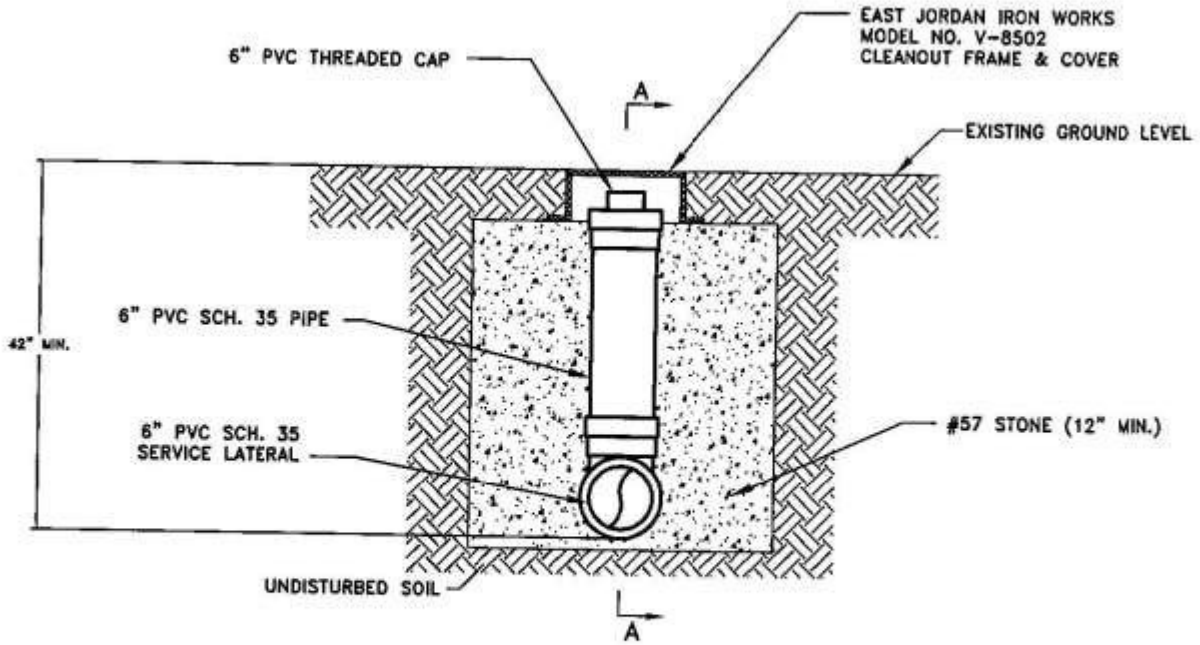

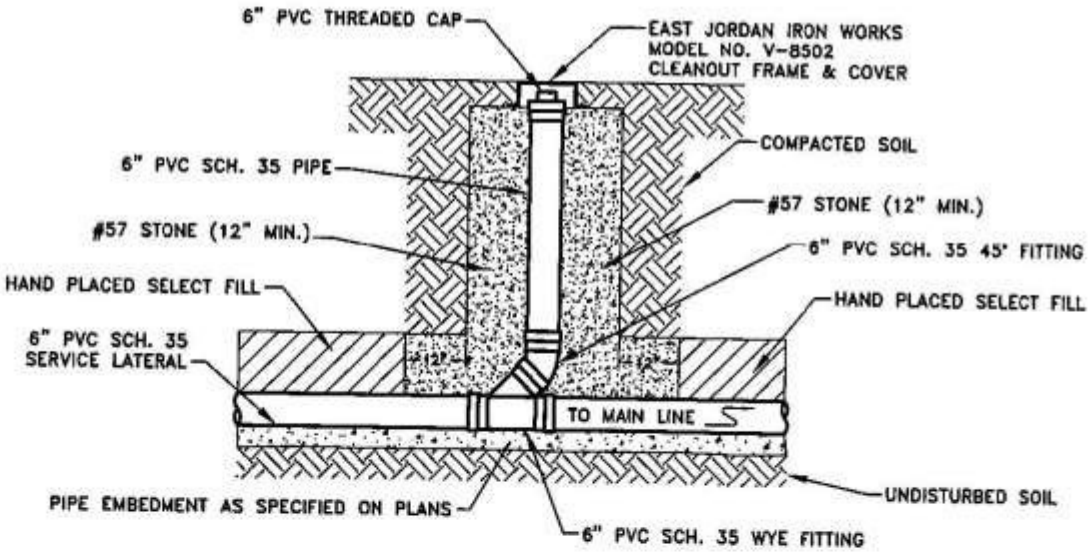

SECTION A-A

NO SCALE

JEFFERSON COUNTY, WEST VIRGINIA	APPROVED: JCPSD GENERAL MANAGER	TYPICAL GRAVITY SEWER CLEANOUT	REVISION DATES 05-27-2009	DETAIL DETAIL S-22

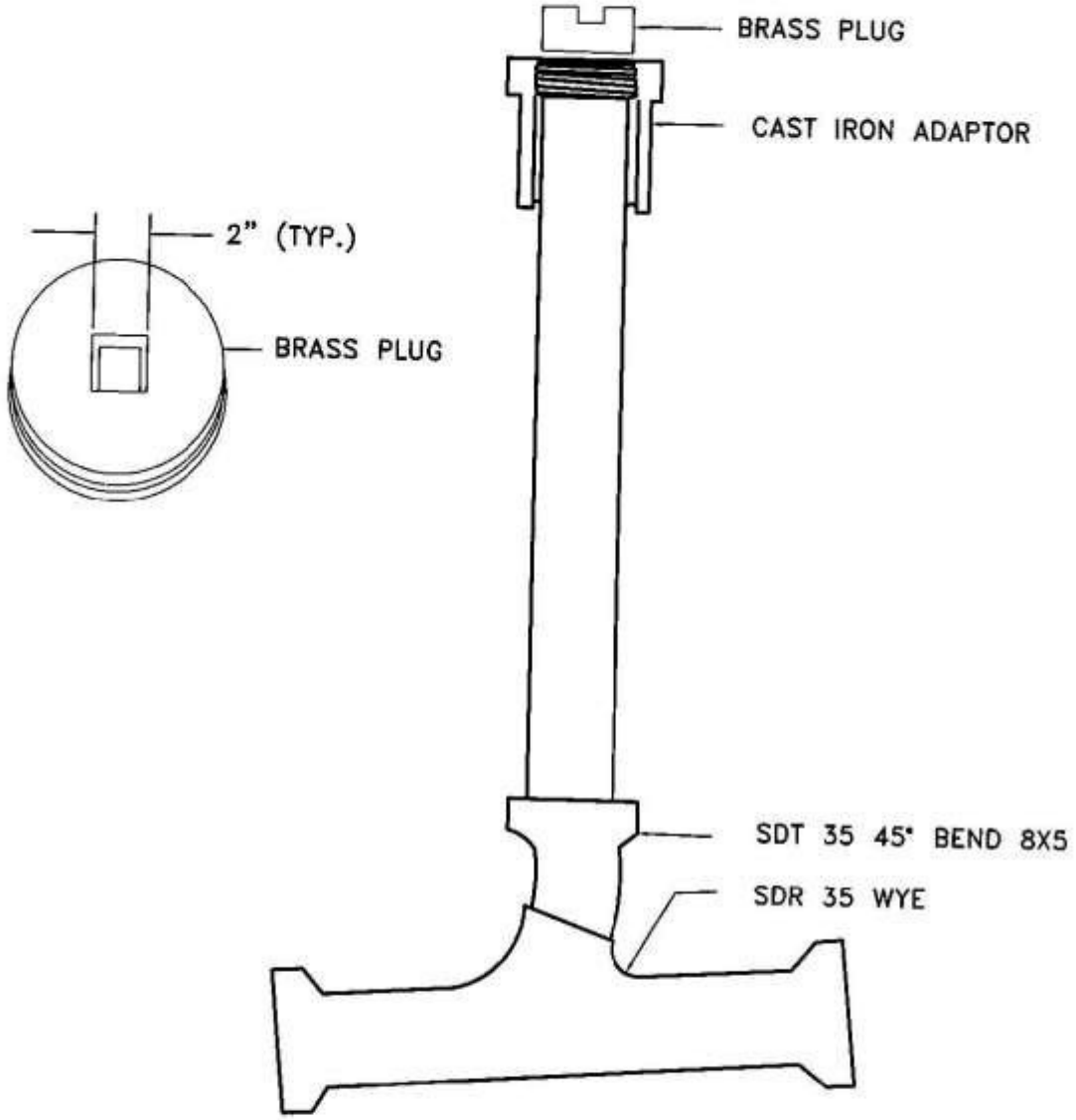

JEFFERSON COUNTY, WEST VIRGINIA	APPROVED: JCPSD GENERAL MANAGER	**CLEAN-OUT, ADAPTOR, & PLUG**	REVISION DATES 05-27-2009	DETAIL DETAIL S-23

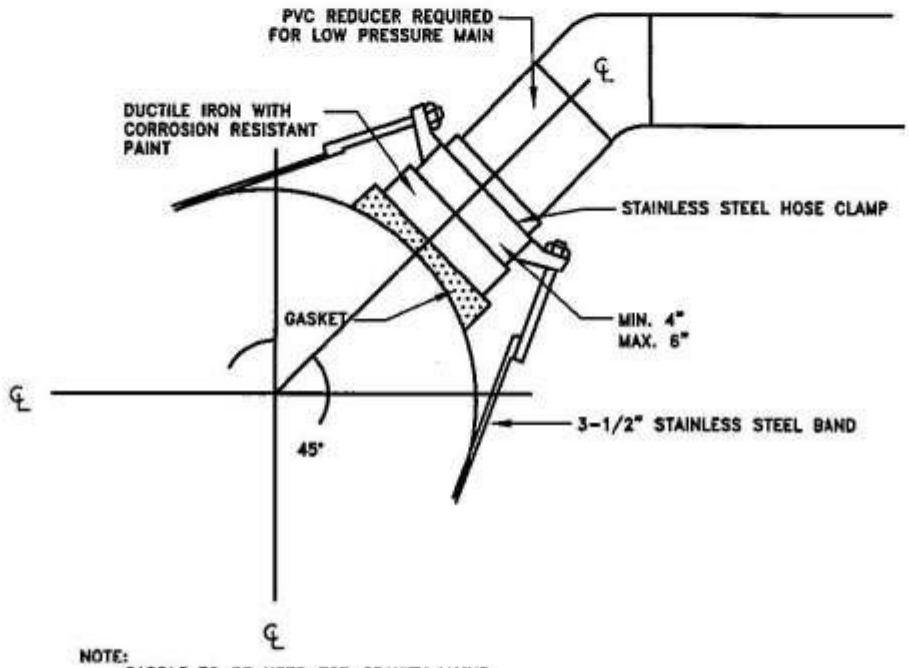

NOTE:
SADDLE TO BE USED FOR GRAVITY MAINS
ALL BOLT, NUTS, & WASHERS 1/2" N.C. ROLL THREAD TEFLON COATED

JEFFERSON COUNTY, WEST VIRGINIA	APPROVED: JCPSD GENERAL MANAGER	CONNECTING TO EXISTING GRAVITY SEWER MAINS	REVISION DATES 05-27-2009	DETAIL DETAIL S-24

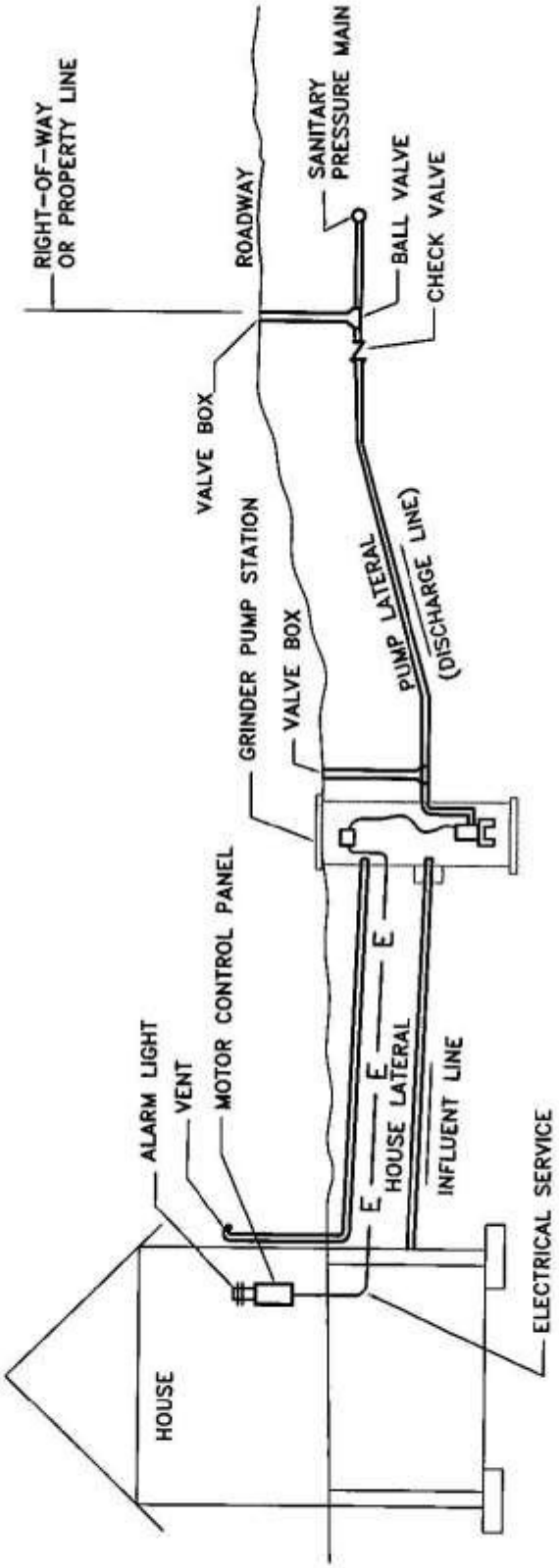

JEFFERSON COUNTY, WEST VIRGINIA	APPROVED: JCPSD GENERAL MANAGER	LOW PRESSURE (GRINDER PUMP) SEWER SERV. LATERAL	REVISION DATES 05-27-2009	DETAIL DETAIL S-25

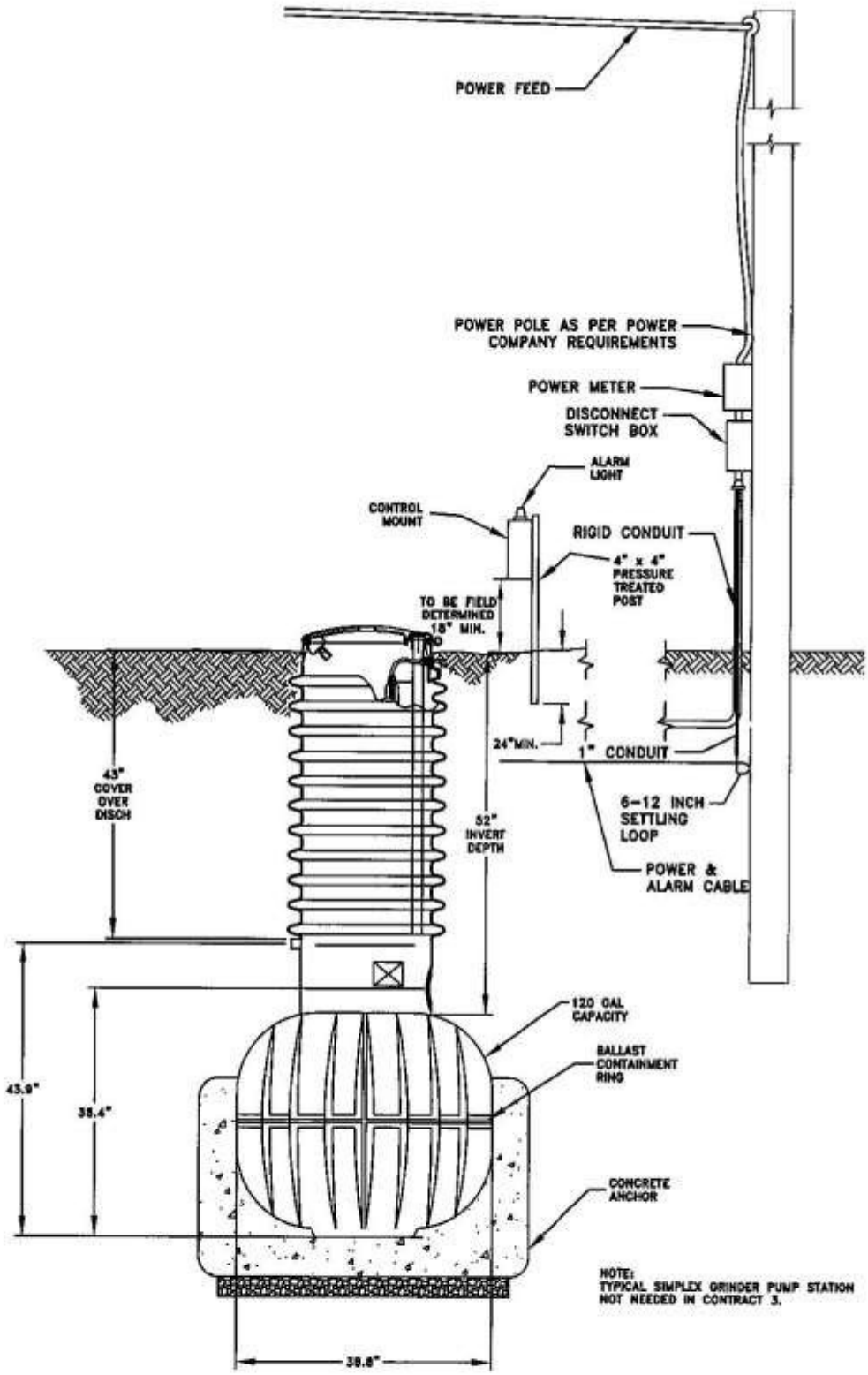

NO SCALE

JEFFERSON COUNTY, WEST VIRGINIA	APPROVED: JCPSD GENERAL MANAGER	TYPICAL SIMPLEX GRINGER PUMP STATION	REVISION DATES 05-27-2009	DETAIL DETAIL S-26

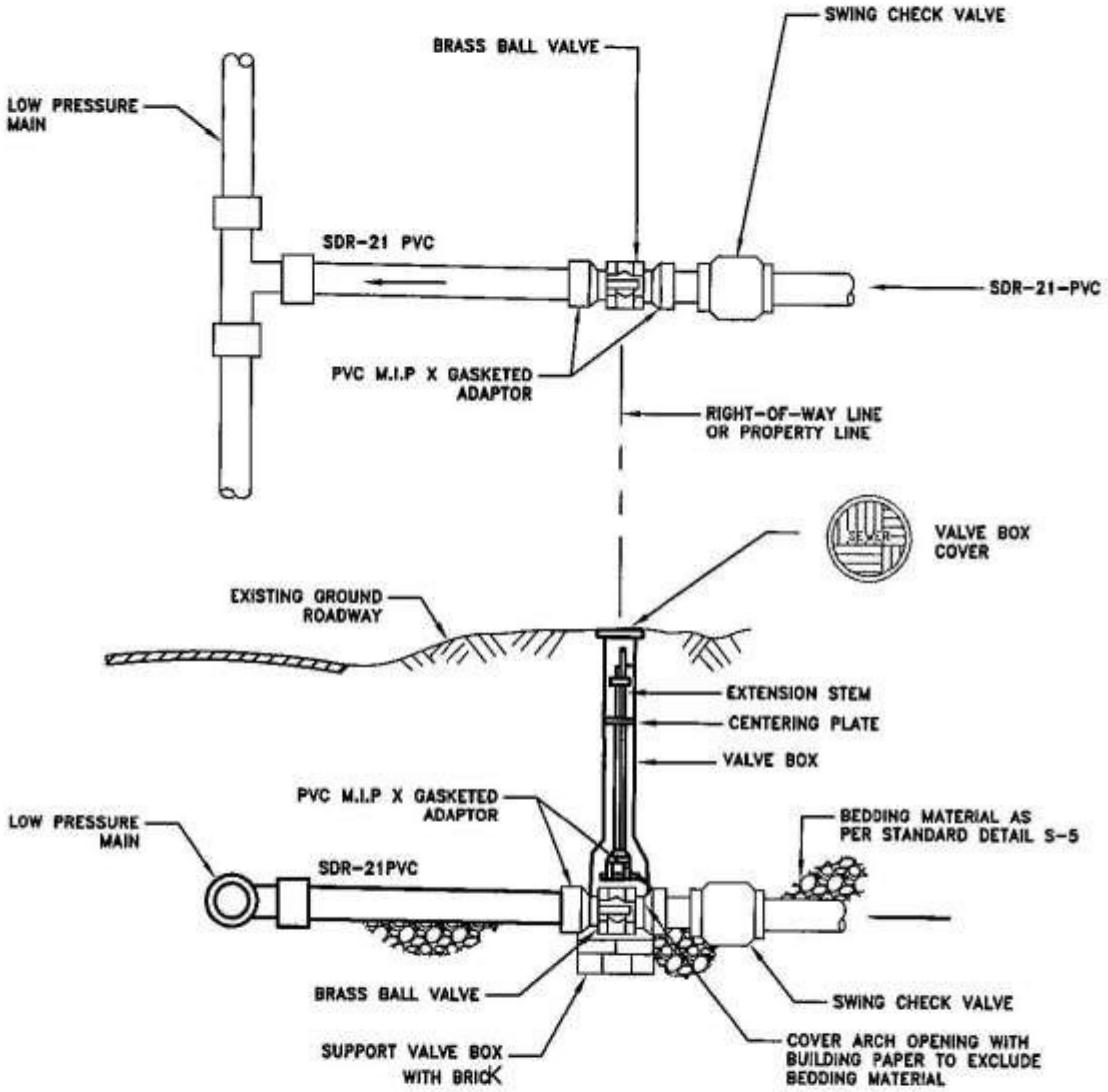

VALVING DETAIL

LOW PRESSURE SEWER
SERVICE CONNECTION

JEFFERSON COUNTY, WEST VIRGINIA	APPROVED: JCPSD GENERAL MANAGER	LOW PRESSURE SEWER SERVICE CONNECTION	REVISION DATES 05-27-2009	DETAIL DETAIL S-27

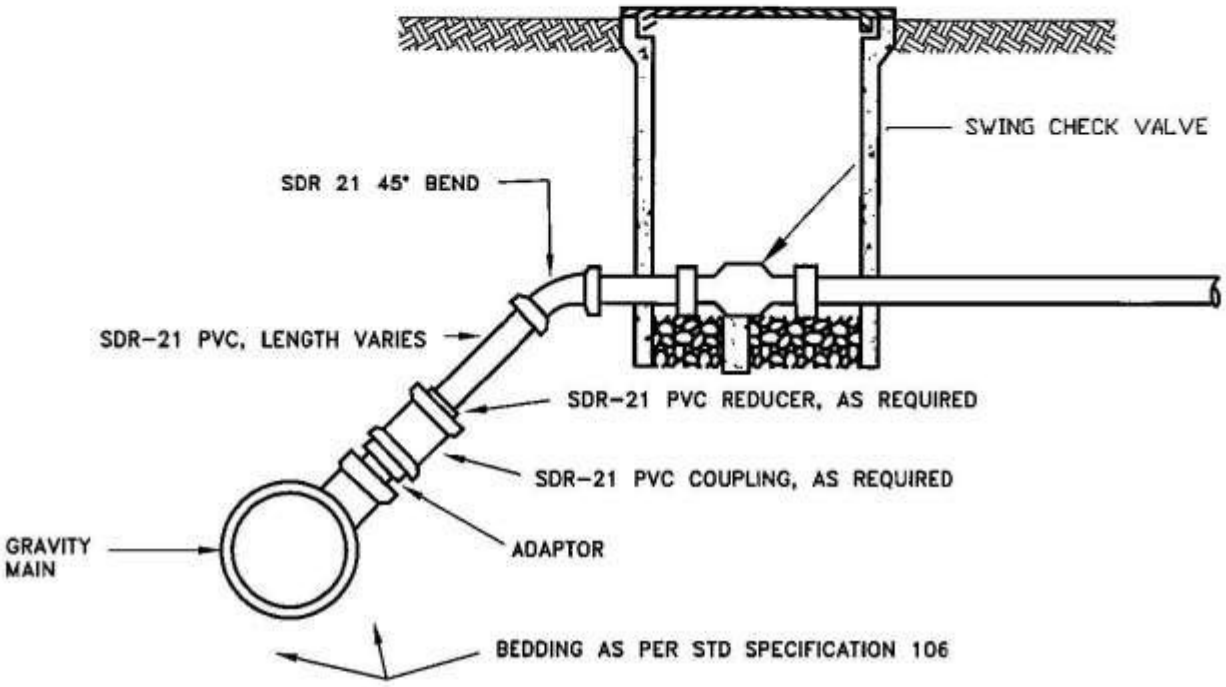

JEFFERSON COUNTY, WEST VIRGINIA	APPROVED:	LOW PRESSURE SEWER SERV. CONNECTION TO GRAVITY MAIN	REVISION DATES 05-27-2009	DETAIL DETAIL S-28
	JCPSD GENERAL MANAGER			

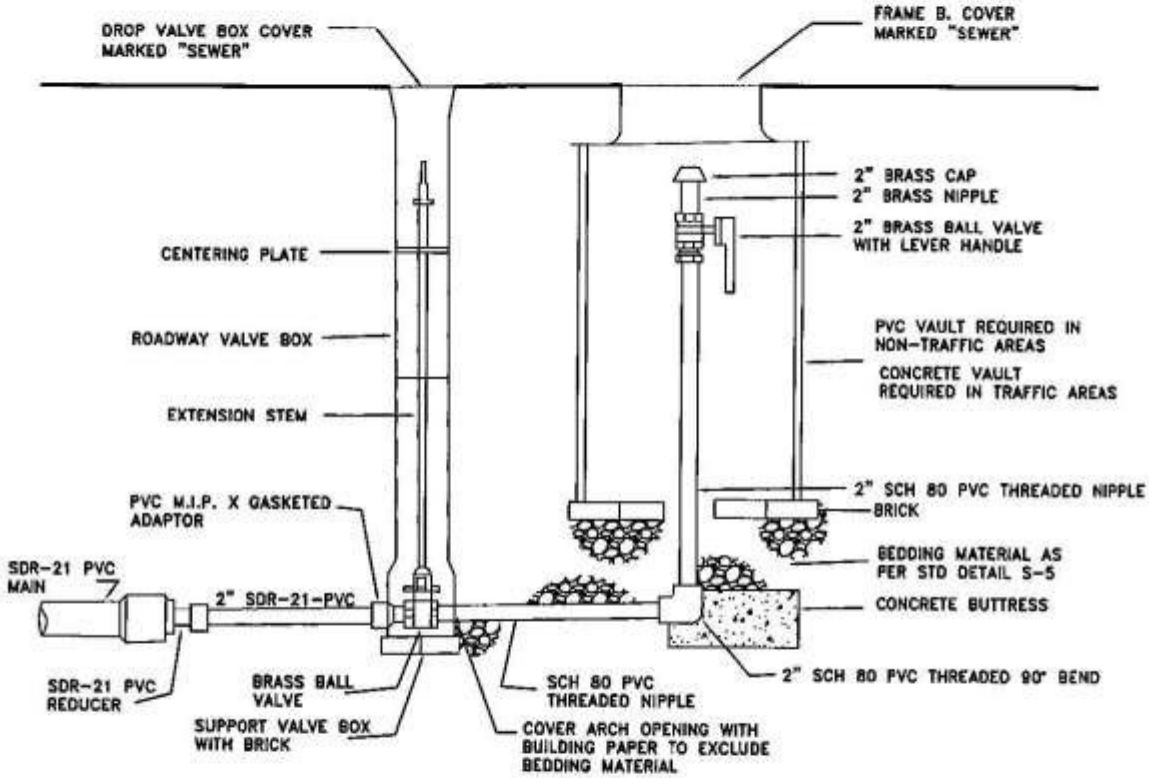

TERMINAL FLUSHING CONNECTION LOW PRESSURE SEWER

NO SCALE

JEFFERSON COUNTY, WEST VIRGINIA	APPROVED:	FLUSHING CONNECT. LOW PRESSURE SEWER	REVISION DATES 05-27-2009	DETAIL DETAIL S-29
	JCPSD GENERAL MANAGER			

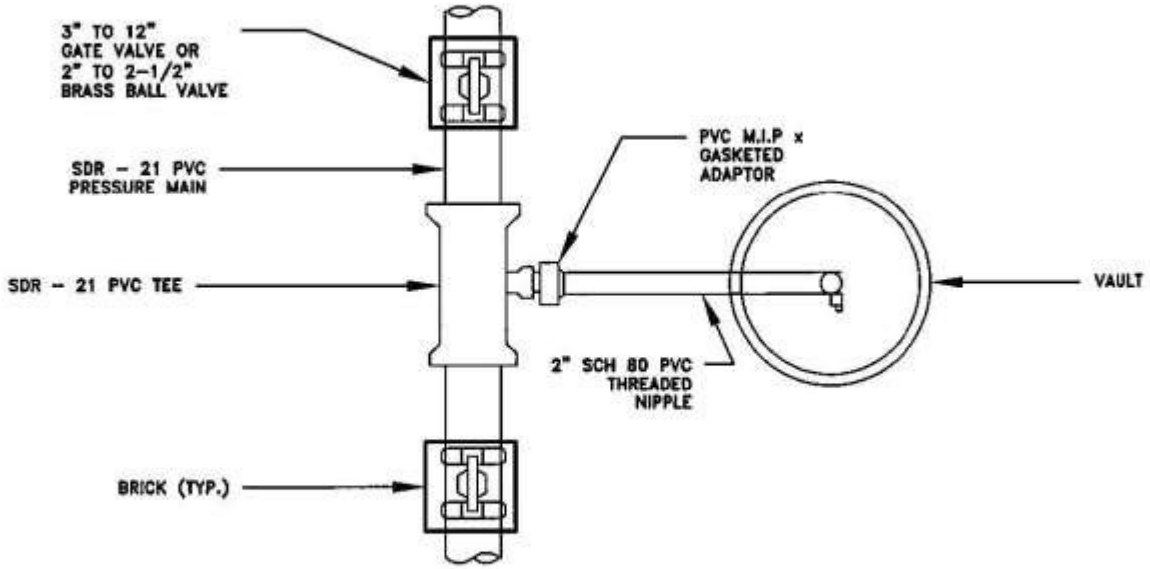

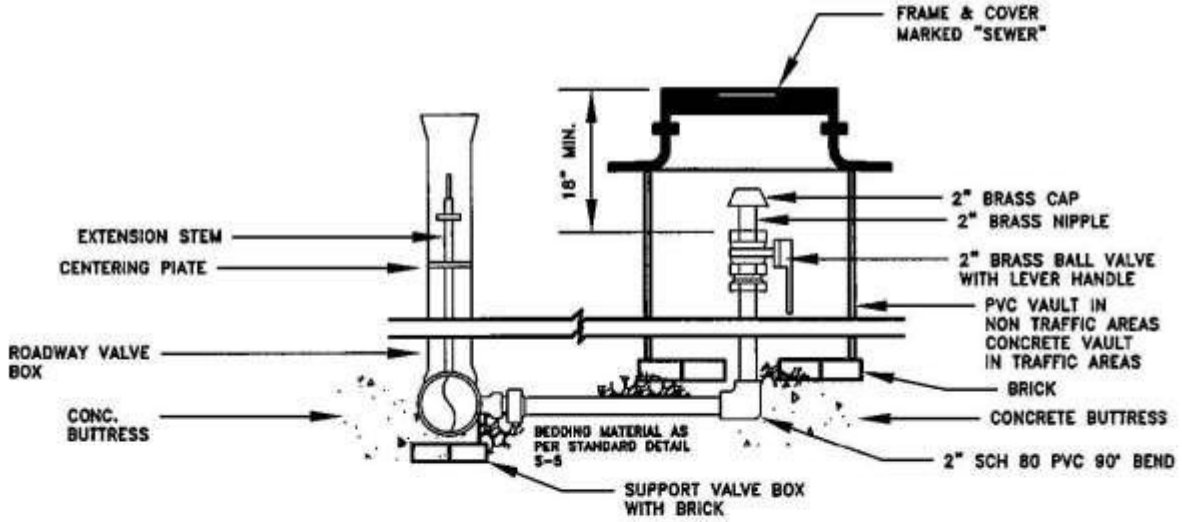

NO SCALE

JEFFERSON COUNTY, WEST VIRGINIA	APPROVED: JCPSD GENERAL MANAGER	FLUSHING CONNECTION LOW PRESSURE SEWER	REVISION DATES 05-27-2009	DETAIL DETAIL S-30

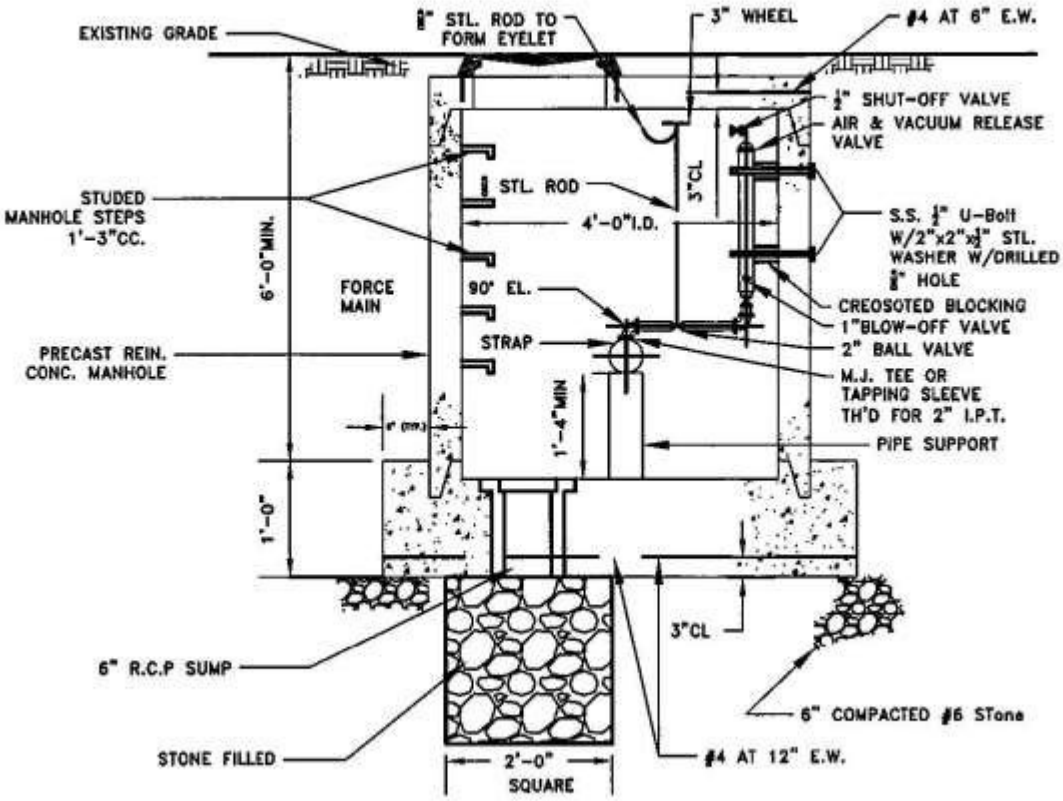

SECTION 1 – 1

SCALE: ½" = 1'-0

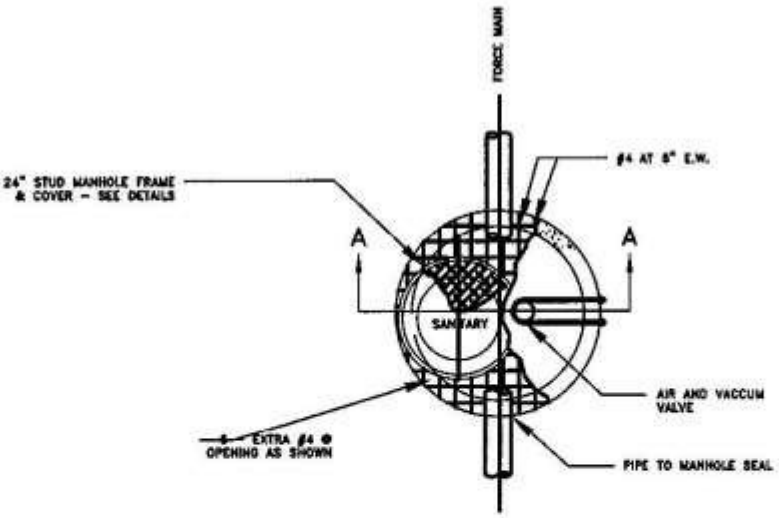

PLAN

SCALE: ½" = 1'-0

JEFFERSON COUNTY, WEST VIRGINIA	APPROVED: JCPSD GENERAL MANAGER	AIR RELEASE & VACCUM VALVE PIT	REVISION DATES 05-27-2009	DETAIL DETAIL S-31

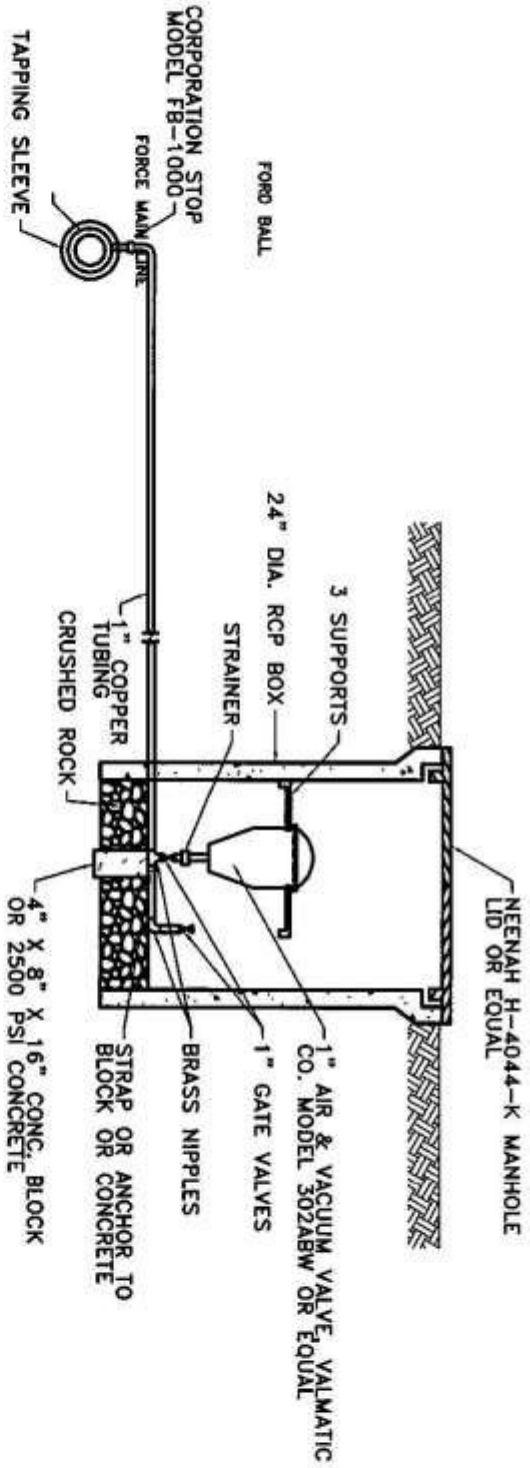

JEFFERSON COUNTY, WEST VIRGINIA	APPROVED:	AIR VALVE DETAIL	REVISION DATES	DETAIL
			05-27-2009	DETAIL S-32
	JCPSD GENERAL MANAGER			

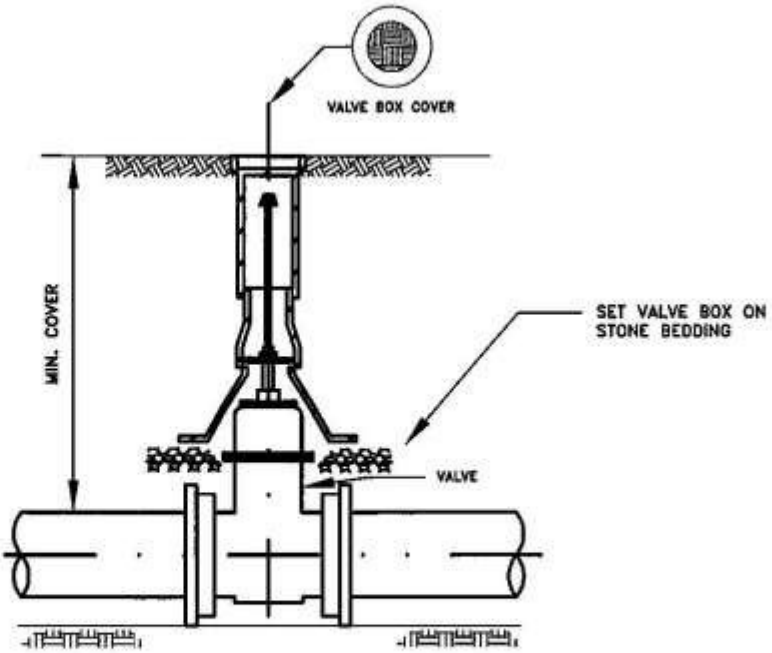

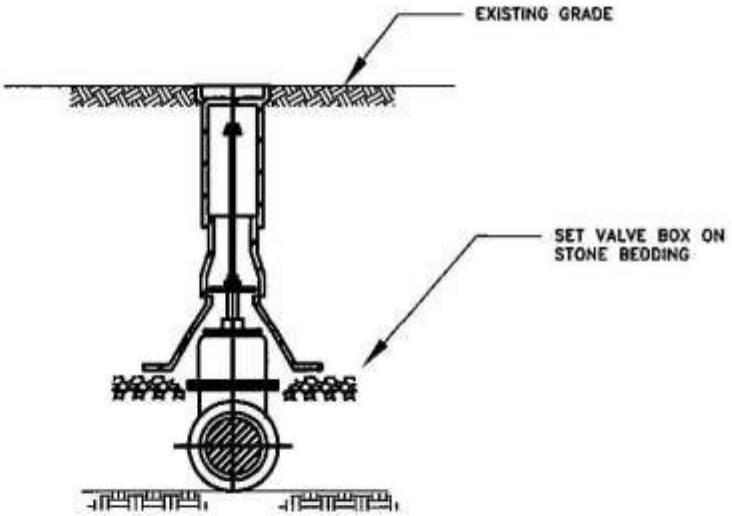

NO SCALE

JEFFERSON COUNTY, WEST VIRGINIA	APPROVED:	VALVE BOX INSTALLATION	REVISION DATES	DETAIL
			05-27-2009	DETAIL S-33
	JCPSD GENERAL MANAGER			

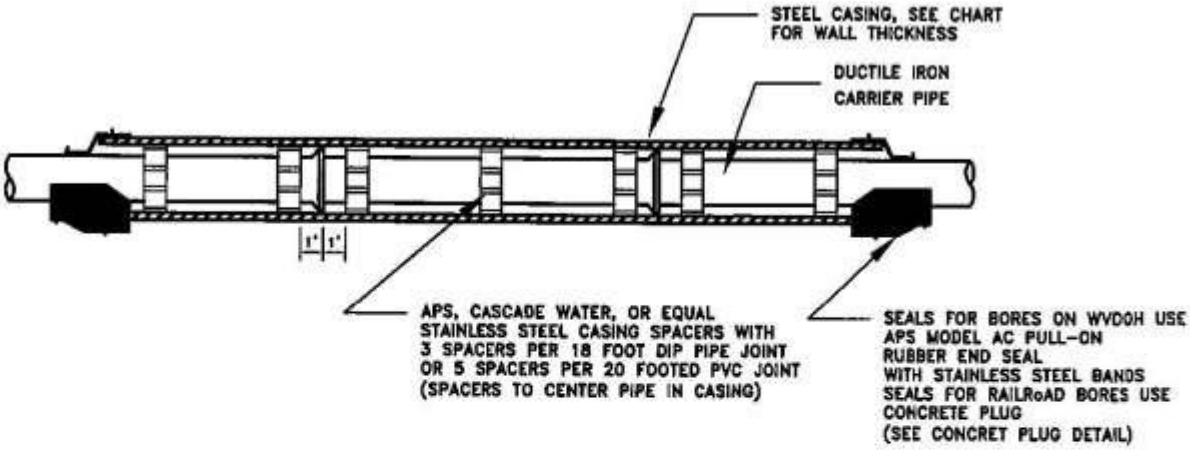

TYPICAL CASING CONFIGURATION
NO SCALE

CARRIER PIPE	CASING	CASING WALL THICKNESS
1" & 1 1/4" CROSSING	4" WELDED STEEL	0.216"
2" CROSSING	6" WELDED STEEL	0.250"
4" CROSSING	14" WELDED STEEL	0.313"
6" CROSSING	16" WELDED STEEL	0.313"
8" CROSSING	18" WELDED STEEL	0.313"
10" CROSSING	20" WELDED STEEL	0.375"
12" CROSSING	24" WELDED STEEL	0.438"
14" CROSSING	26" WELDED STEEL	0.438"
16" CROSSING	28" WELDED STEEL	0.500"

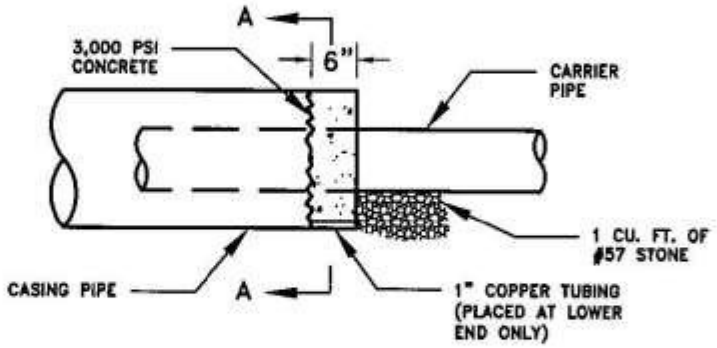

TYPICAL CASING END SECTION

JEFFERSON COUNTY, WEST VIRGINIA	APPROVED: JCPSD GENERAL MANAGER	TYPICAL CASING & PLUG	REVISION DATES 05-27-2009	DETAIL DETAIL S-34

NOTE:
SEE CONTRACT ENGINEERING SPECIFICATIONS
APPENDIX FOR FURTHER RAILWAY AND WVDOH.
DETAIL AND REQUIREMENTS.

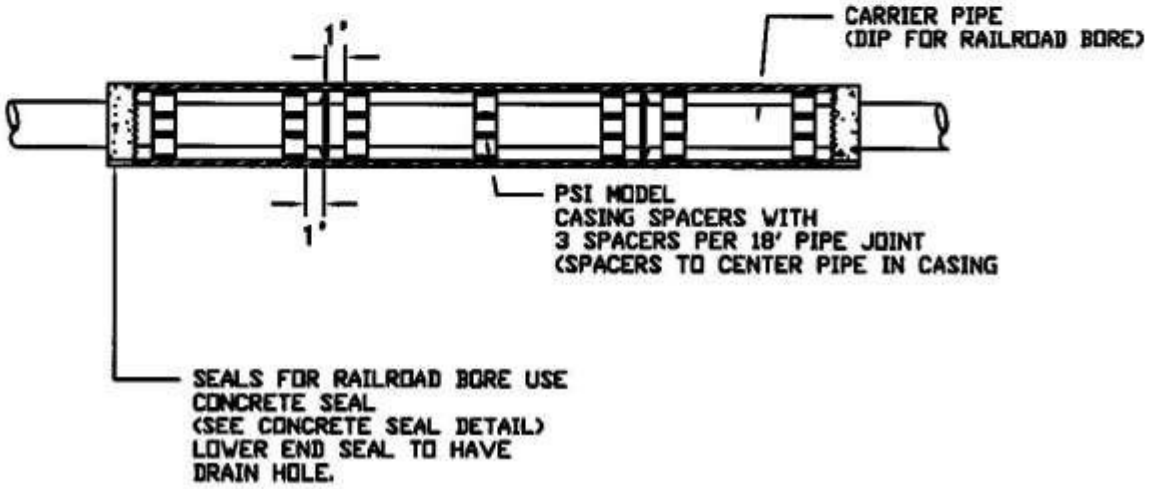

JEFFERSON COUNTY, WEST VIRGINIA	APPROVED:	RAILWAY AND HIGHWAY ROAD BORE AND JACK/OPEN CUT	REVISION DATES	DETAIL
			05-27-2009	DETAIL S-35
	JCPSD GENERAL MANAGER			

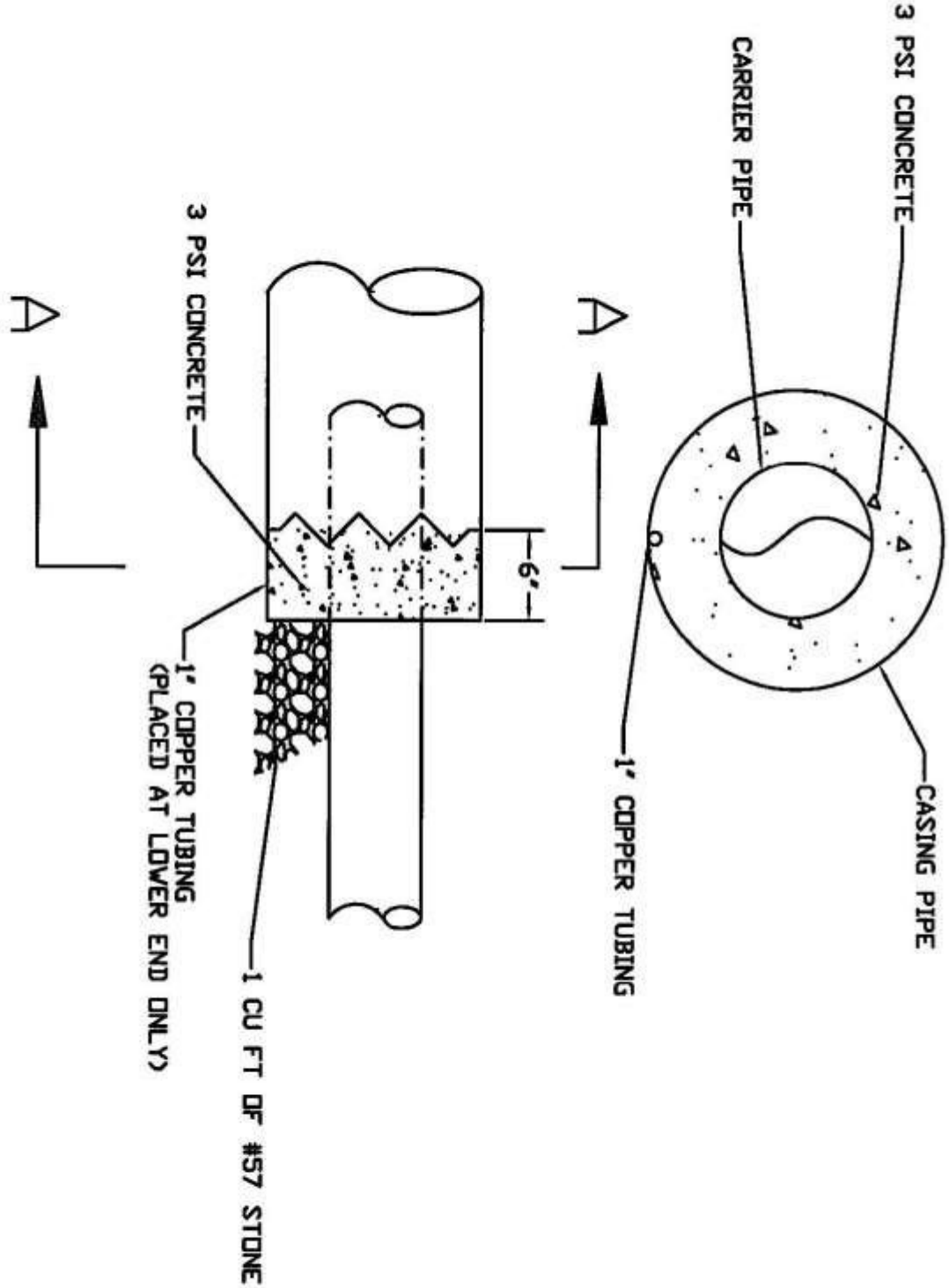

JEFFERSON COUNTY, WEST VIRGINIA	APPROVED: JCPSD GENERAL MANAGER	TYPICAL CASING END SECTION	REVISION DATES 05-27-2009	DETAIL DETAIL S-36

CARRIER PIPE	CASING	CASING WALL THICKNESS
1" & 1 1/4" CROSSING	4" WELDED STEEL	0.216"
2" CROSSING	6" WELDED STEEL	0.250"
4" CROSSING	14" WELDED STEEL	0.313"
6" CROSSING	16" WELDED STEEL	0.313"
8" CROSSING	18" WELDED STEEL	0.313"
10" CROSSING	20" WELDED STEEL	0.375"
12" CROSSING	24" WELDED STEEL	0.438"
14" CROSSING	26" WELDED STEEL	0.438"
16" CROSSING	28" WELDED STEEL	0.500"

JEFFERSON COUNTY, WEST VIRGINIA	APPROVED: JCPSD GENERAL MANAGER	CASING PIPE THICKNESS	REVISION DATES 05-27-2009	DETAIL DETAIL S-37

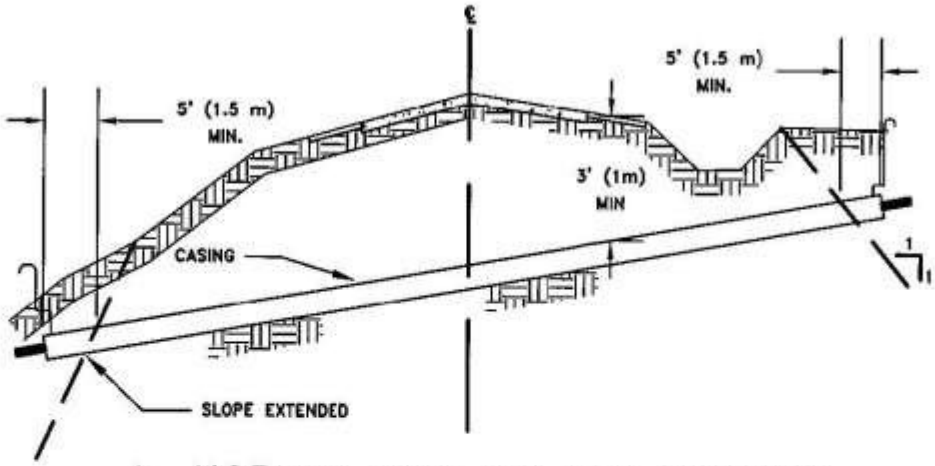

A. NORMAL CUT OR FILL SECTION

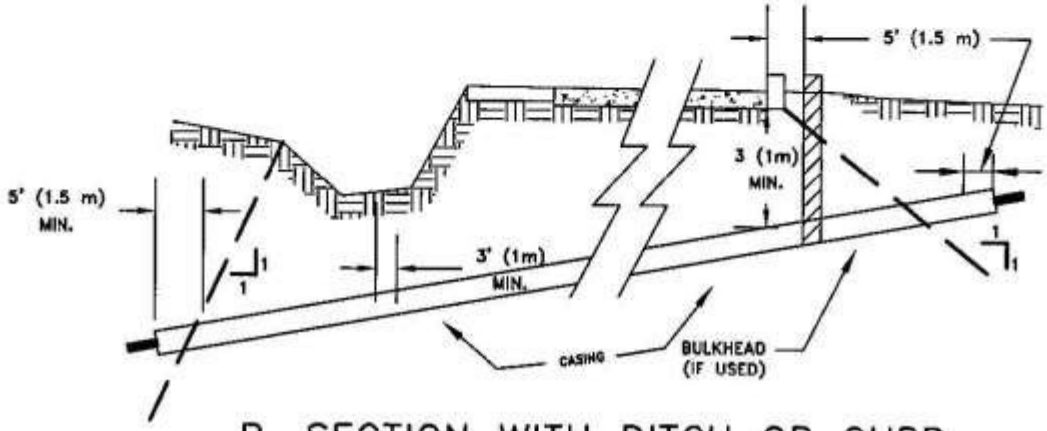

B. SECTION WITH DITCH OR CURB

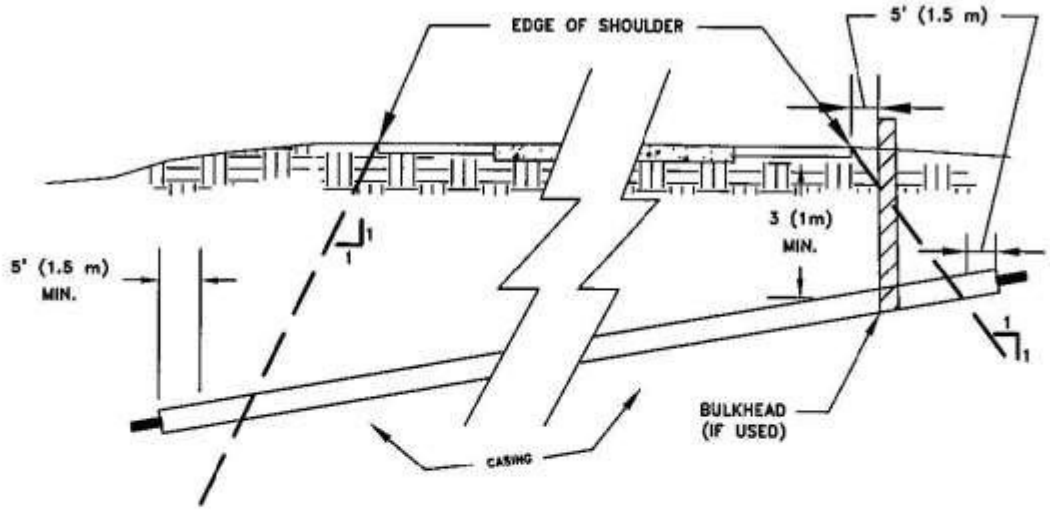

C. SECTION WITHOUT DITCH

FIGURE 2

JEFFERSON COUNTY, WEST VIRGINIA	APPROVED: JCPSD GENERAL MANAGER	TYPICAL ROAD CROSSING SECTIONS	REVISION DATES 05-27-2009	DETAIL DETAIL S-38

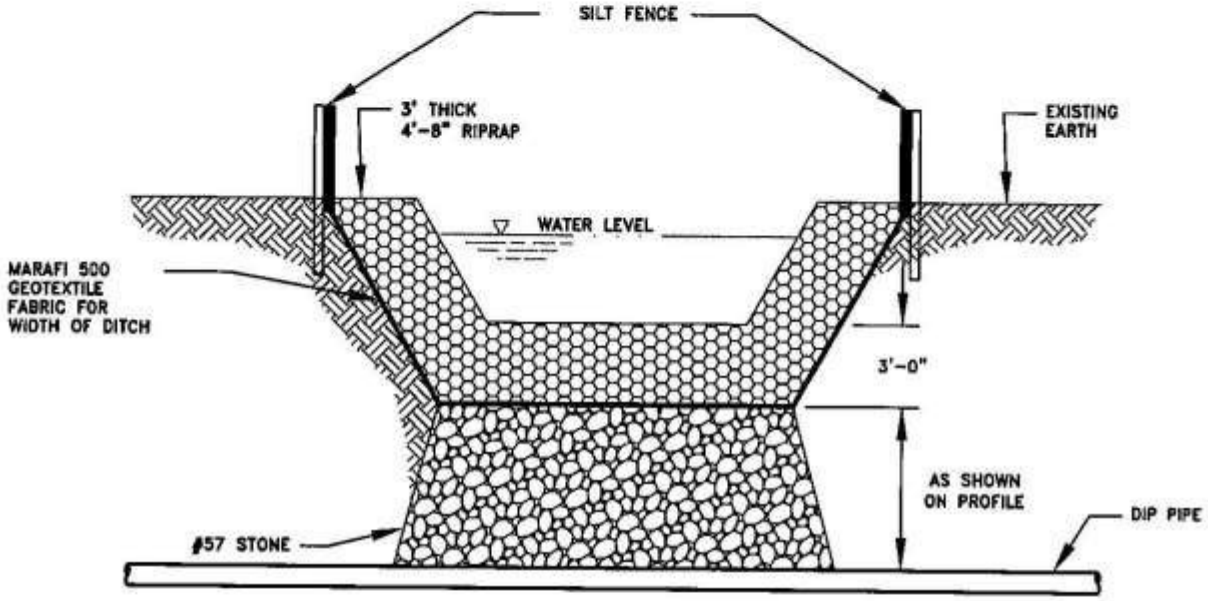

NO SCALE

JEFFERSON COUNTY, WEST VIRGINIA	APPROVED: JCPSD GENERAL MANAGER	**TYPICAL STREAM CROSSING**	REVISION DATES 05-27-2009	DETAIL DETAIL S-39

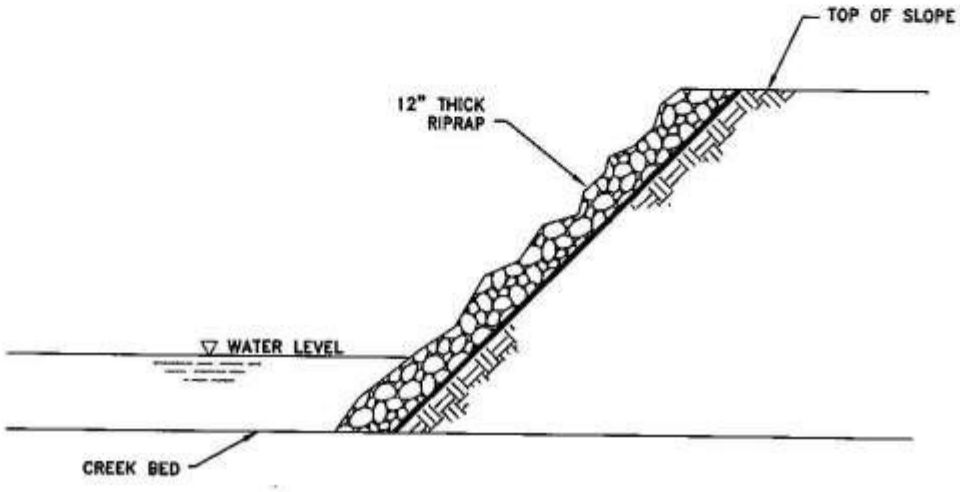

NO SCALE

JEFFERSON COUNTY, WEST VIRGINIA	APPROVED:	TYPICAL CREEK SLOPE RIPRAP	REVISION DATES	DETAIL
			05-27-2009	DETAIL S-40
	JCPSD GENERAL MANGER			

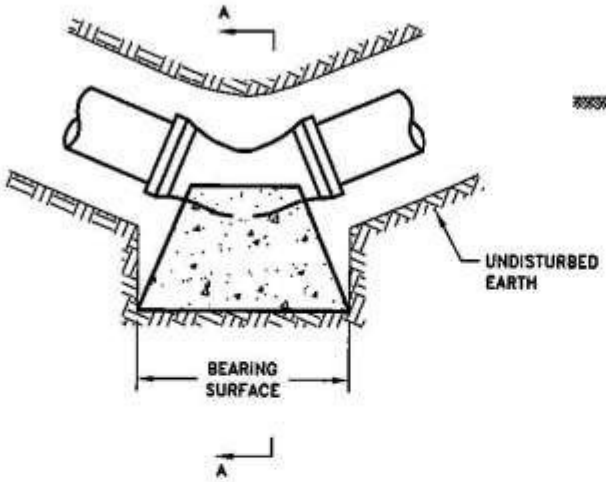

PLAN

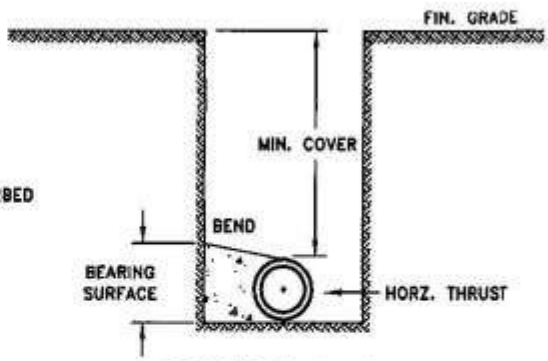

SECTION A–A

NOTES:
1. ALL CONCRETE SHALL HAVE A MINIMUM COMPRESSIVE STRENGTH OF 2500 PSI AT THE END OF 28 DAYS.
2. ALL REINFORCING STEEL SHAL BE DEFORMED BARS.
3. NO COUPLING OR JOINTS SHALL BE COVERED W/ CONRETE
4. FOR BEARING SURFACE DIMENSIONS, SEE SHT. 2 OF 5 S-48

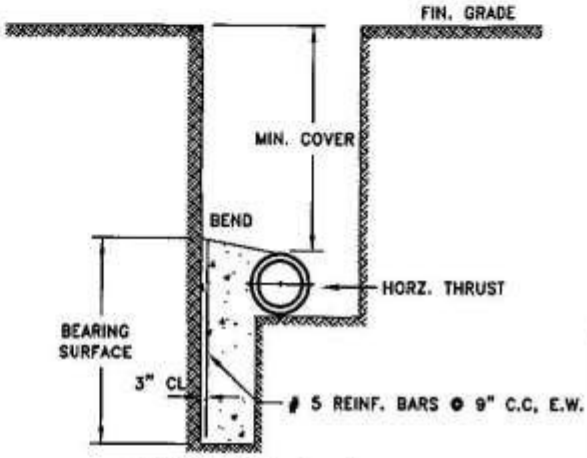

SECTION A–A

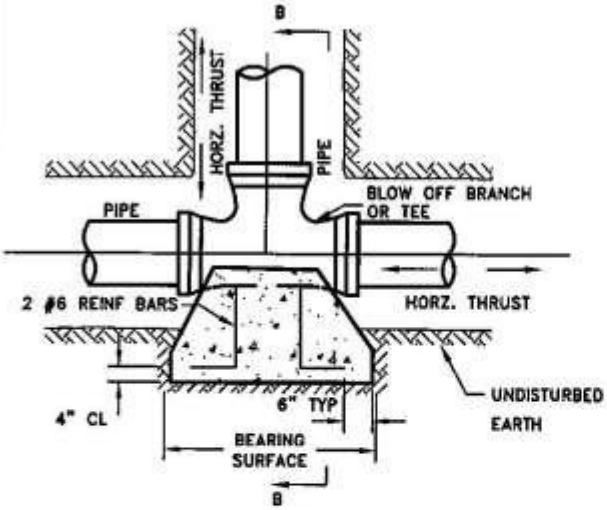

PLAN

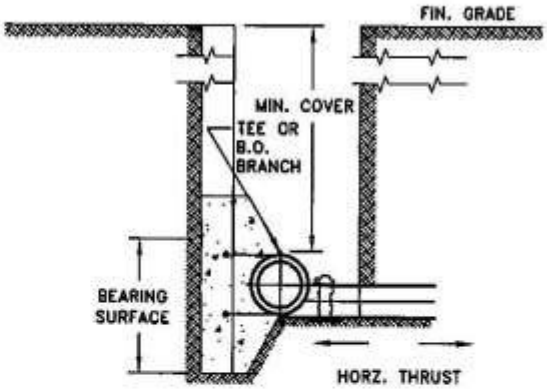

SECTION B–B

JEFFERSON COUNTY, WEST VIRGINIA	APPROVED: JCPSD GENERAL MANAGER	TYPICAL BLOCKING FOR HORIZONTAL THRUST	REVISION DATES 05-27-2009	DETAIL DETAIL S-41

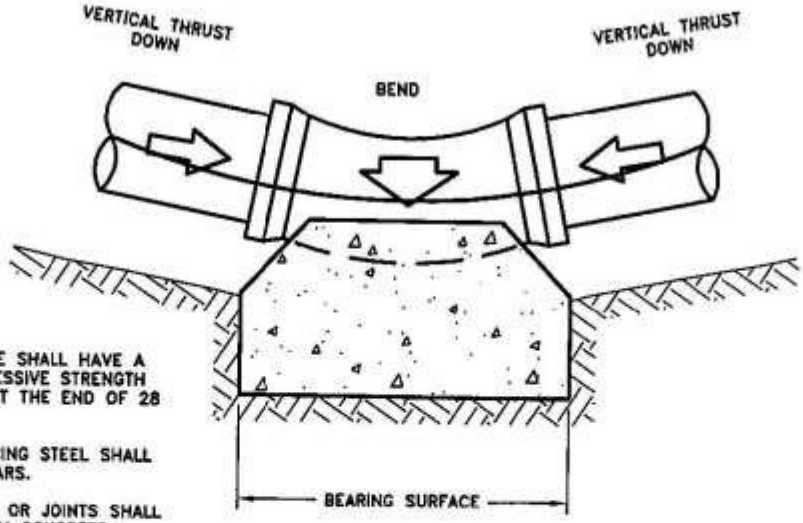

VERTICAL THRUST DOWNWARD

NOTES

1. ALL CONCRETE SHALL HAVE A MINIMUM COMPRESSIVE STRENGTH OF 2500 P.S.I AT THE END OF 28 DAYS.

2. ALL REINFORCING STEEL SHALL BE DEFORMED BARS.

3. NO COUPLING OR JOINTS SHALL BE COVERED WITH CONCRETE.

4. FOR BEARING SURFACE DIMENSIONS SEE SHT. 4 OF 5, S - 50

5. PAINT ALL EXPOSED STEEL WITH TWO COATS OF ASPHALT PAINT.

FOR 6" PIPES & LESS, USE BARS OVER FITTING ONLY.

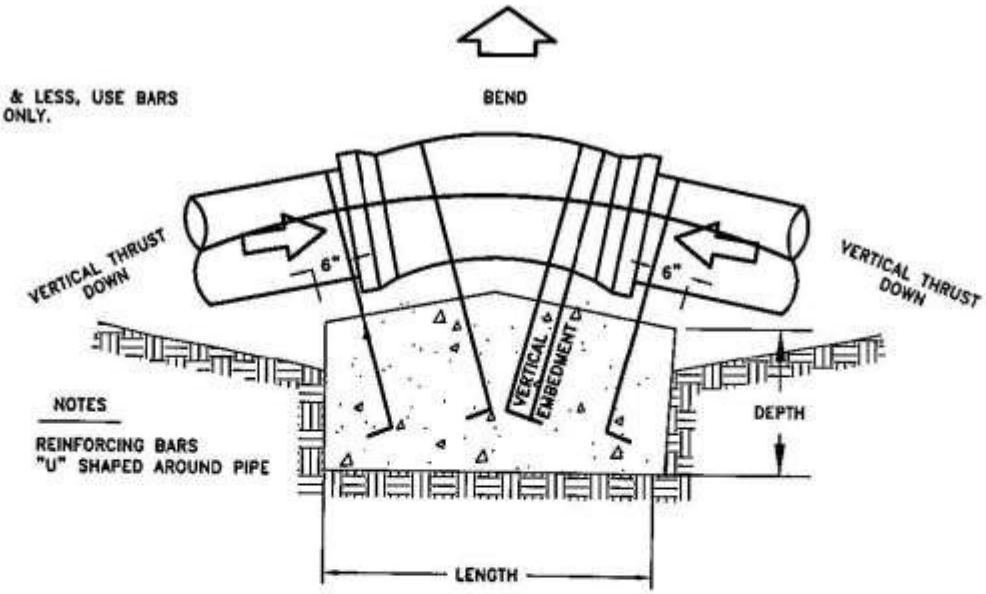

NOTES

REINFORCING BARS "U" SHAPED AROUND PIPE

VERTICAL THRUST UPWARD

JEFFERSON COUNTY, WEST VIRGINIA	APPROVED: JCPSD GENERAL MANAGER	VERTICAL THRUST DOWNWARDS & UPWARDS	REVISION DATES 05-27-2009	DETAIL DETAIL S-42

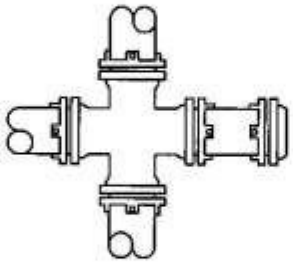

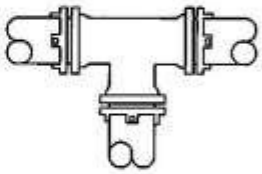

MEGA LUG
FITTING SIZE
4
6
8
10
12

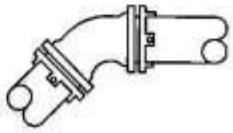

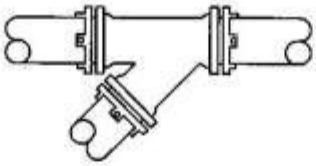

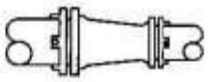

HORIZONTAL THRUST RESTRAINT DETAIL

JEFFERSON COUNTY, WEST VIRGINIA	APPROVED: JCPSD GENERAL MANAGER	HORIZONTAL THRUST RESTRAINT	REVISION DATES 05-27-2009	DETAIL DETAIL S-43

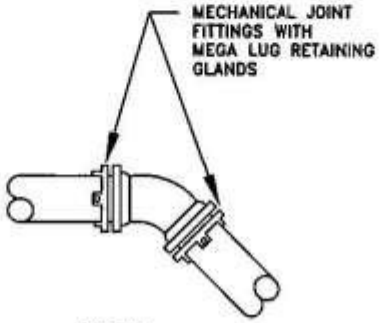

PROFILE

FITTING SIZE	90°	45°	22 1/2°	11 1/4°
4 6 8 10 12	MJ	MJ	MJ	MJ

VERTICAL THRUST RETRAINT DETAIL

JEFFERSON COUNTY, WEST VIRGINIA	APPROVED: JCPSD GENERAL MANAGER	**VERTICAL THRUST RETRAINT**	REVISION DATES 05-27-2009	DETAIL DETAIL S-44

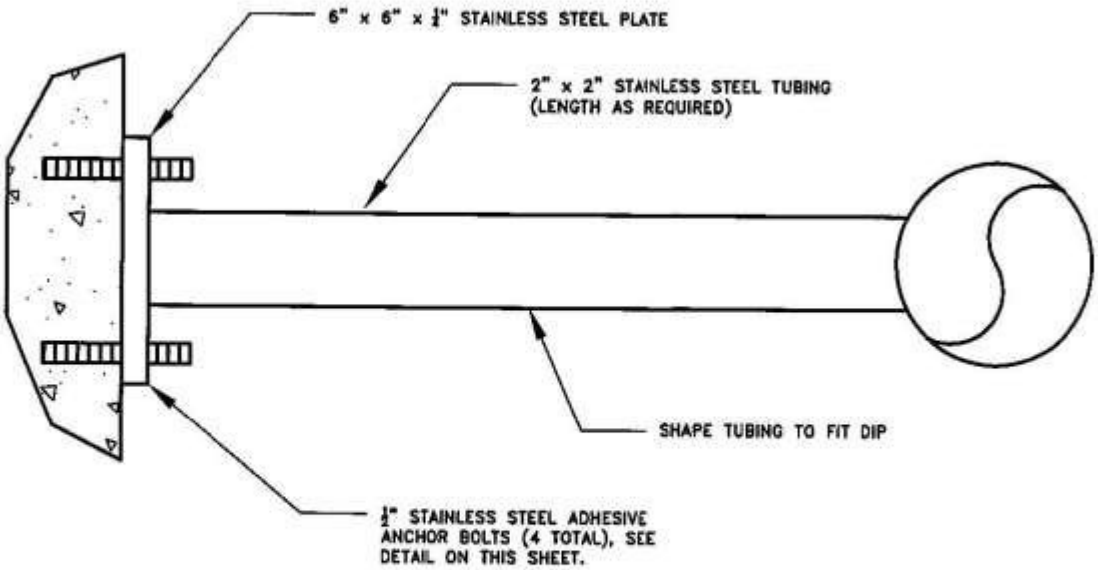

TRUST SUPPORT DETAIL

NO SCALE

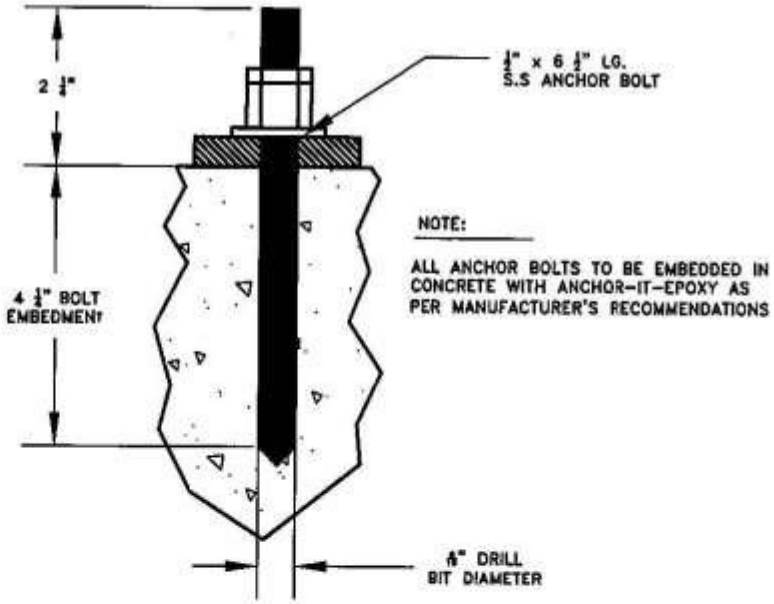

NOTE:

ALL ANCHOR BOLTS TO BE EMBEDDED IN CONCRETE WITH ANCHOR-IT-EPOXY AS PER MANUFACTURER'S RECOMMENDATIONS

TYPICAL ½" ADHESIVE ANCHOR DETAIL

NO SCALE

JEFFERSON COUNTY, WEST VIRGINIA	APPROVED: JCPSD GENERAL MANAGER	THRUST SUPPORT & ADHESIVE ANCHOR	REVISION DATES 05-27-2009	DETAIL DETAIL S-45

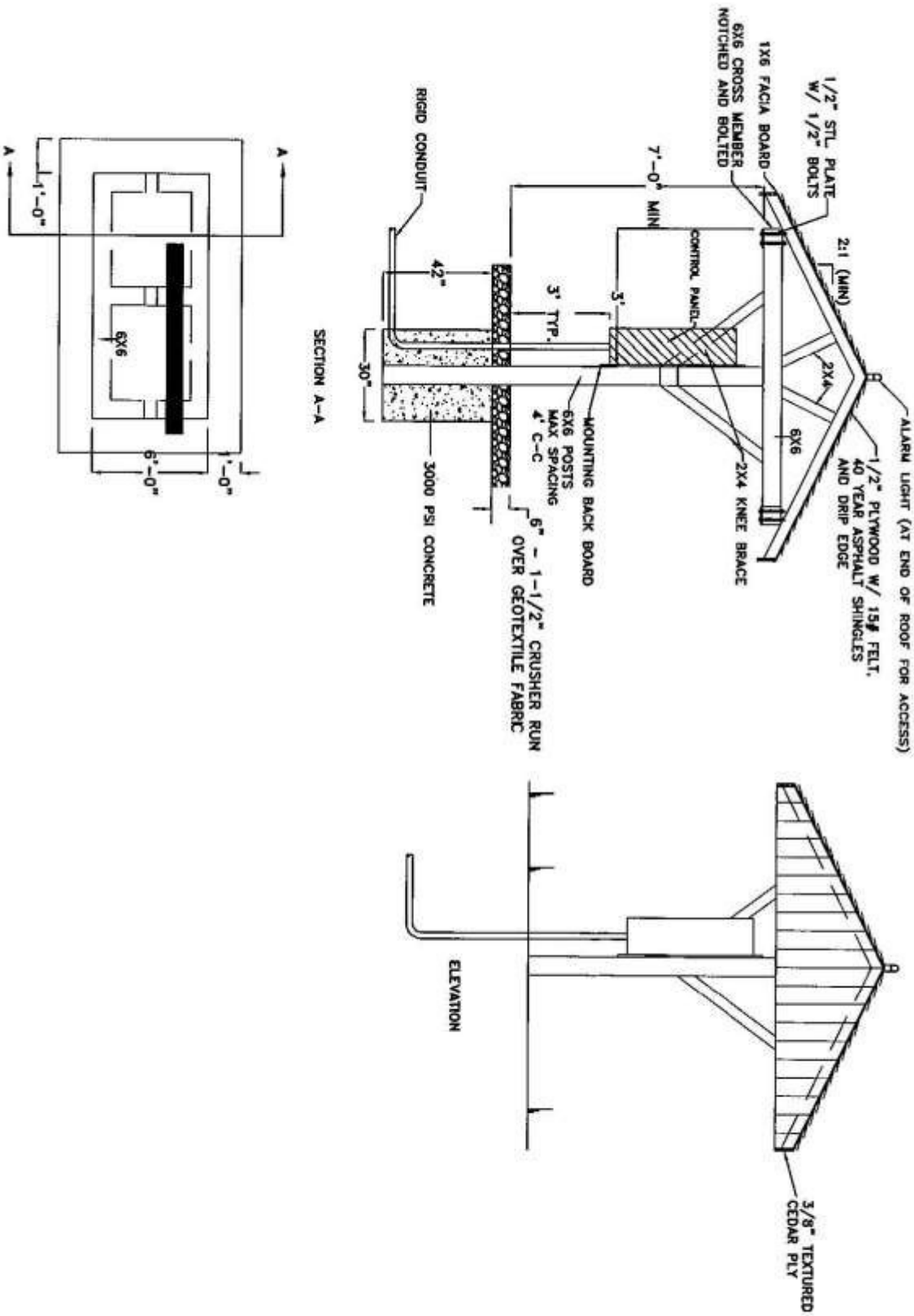

JEFFERSON COUNTY, WEST VIRGINIA	APPROVED: JCPSD GENERAL MANAGER	SHELTER DETAILS	REVISION DATES 05-27-2009	DETAIL DETAIL S-46

TESTING AND REPORTING FORMS

Sewer Inspection Connection Report ..... Page E-1

Daily Inspection Form ..... Page E-2

Lateral Locator ..... Page E-3

Line Acceptance Test ..... Page E-4

Manhole Acceptance Test ..... Page E-5

Pump Station Data Sheet ..... Page E-6

Lift Station Pump Down Results ..... Page E-7

Water Meter Log Sheet ..... Page E-8

Project Punch List ..... Page E-9

Jefferson County Public Service District

Sewer Inspection Connection Report

Person Requesting Inspection: _____

Date/Time Inspection Is Ready: _____

Phone Number: _____ (Home)

_____ (Work)

Do We Have The Plat? _____

Date 1st Requested: _____

Date 2nd Requested: _____

Date 3rd Requested: _____

Other: _____

Lot/Location Information

Development: _____

Lot #: _____

Building Permit #: _____

Developer/Owner Information

Developer/Owner's Name: _____

Mailing Address: _____

_____

Phone/Contact #: _____ (Home) _____ (Work)

Sewer Connection Information (Office Use Only)

Installer/Plumber: _____

Mailing Address: _____

_____

Phone/Contact #: _____

_____

Inspected By: _____

Notes: _____

_____

_____

_____

Passed: _____

Failed: _____

Date: _____

Initials: _____

PENTREE, INCORPORATED
CONSULTING ENGINEERS

1428 Main St.
P.O. Box 1309
Princeton, WV 24740-1309
Phone: (304)-431-7800
Fax: (304) 425-0445

PROJECT: _____

PROJECT#: _____

CONTRACT#: _____

CONTRACTOR: _____

WEATHER: _____

CREW NUMBER _____

DATE: _____ DAY OF WEEK _____ MONTH _____ DAY _____ YEAR

DAILY INSPECTION FORMS

BID ITEM	QUANTITY	DESCRIPTION	SHEET NUMBER	LOCATION

REMARKS: _____

NOTE! (DAYS NOT WORKED) _____

REASON: _____

PREPARED BY: _____
INSPECTOR

APPROVED BY: _____
CONTRACTOR

THRASHER ENGINEERING

CIVIL • ENVIRONMENTAL • CONSULTING • FIELD SERVICES

30 Columbia Blvd.
Clarksburg, WV 26301
Phone: (304)-624-4108
Fax: (304)-624-7831

PROJECT: _____

PROJECT#: _____

CONTRACT#: _____

CONTRACTOR: _____

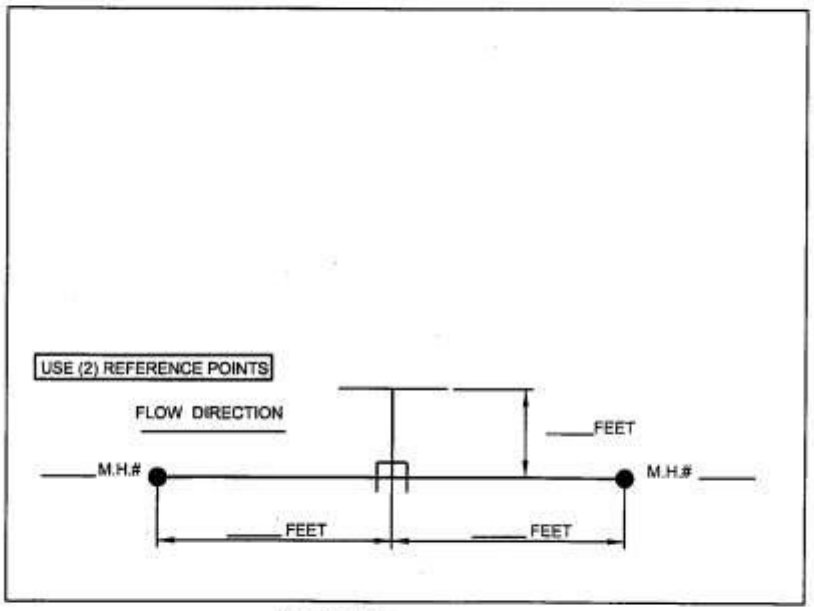

PHOTOGRAPHS TAKEN: (CIRCLE ONE) Y N

DATA:

TM AND PARCEL #: _____

STREET ADDRESS: _____

PROPERTY OWNER: _____

PROJECT REP: _____

PI PENTREE, INCORPORATED
CONSULTING ENGINEERS

1428 Main St.
P.O. Box 1309
Princeton, WV 24740-1309
Phone: (304)-431-7800
Fax: (304) 425-0445

PROJECT: _____

PROJECT#: _____

CONTRACT#: _____

CONTRACTOR: _____

LINE ACCEPTANCE TEST
(HYDROSTATIC, AIR PRESSURE OR LAMP TESTING)

SHEET#	LINEAL JOINTS	PIPE SIZE	PIPE TYPE	TEST PRESSURE	TEST LOCATION	TEST TIME	LEAKAGE (PSI)	TEST RESULTS	DISTANCE	M.H. # TO M.H. #

COMMENTS: _____

PROJECT REP: _____ DATE: _____

CONTRACTOR REP: _____ WEATHER: _____

PENTREE, INCORPORATED
CONSULTING ENGINEERS

1428 Main St.
P.O. Box 1309
Princeton, WV 24740-1309
Phone: (304)-431-7800
Fax: (304) 425-0445

PROJECT: _____

PROJECT#: _____

CONTRACT#: _____

CONTRACTOR: _____

MANHOLE ACCEPTANCE TEST
(VACUUM TESTING)

MANHOLE	SHEET#	INCHES OF HG	TEST TIME	LEAKAGE	REPAIRS MADE	TEST DATE	TEST RESULTS

COMMENTS: _____

PROJECT REP: _____ DATE: _____

CONTRACTOR REP: _____ WEATHER: _____

PUMP STATION DATA SHEET

Name Jefferson County P.S.D.
Type Station
Hydraulic Conditions GPM @ TDH
Power Supply Wire Phase Hz. Volts

PUMP
Manufacturer
Model # Serial #
Discharge Size Impeller
Horsepower RPM
Phase Frequency
Max. Amps at Volts

CONTROLS

	Manufacturer	Size	Model
CB			
Starter			
Heater			
Control Logic			
Relays			
Lightning Arrestor			
Power Mon.			

AUXILIARY POWER

	Manufacturer	Size	Model
Generator			
Transfer Switch			

PIPE FITTINGS & VALVES

Pipe & Fittings	Size	Material	
Gate/Plug Valve	MANUFACTURER	Model	Size
Check Valve	Manufacturer	Model	Size

Misc. Information

PI PENTREE, INCORPORATED
CONSULTING ENGINEERS

1428 Main St.
P.O. Box 1309
Princeton, WV 24740-1309
Phone: (304)-431-7800
Fax: (304) 425-0445

PROJECT: _____

PROJECT#: _____

CONTRACT#: _____

CONTRACTOR: _____

LIFT STATION PUMP DOWN RESULTS

DATE: _____ MFS REP: _____

LOCATION: _____ MFS PUMP RATE: _____

STATION SPECS

STATION: _____

DIAMETER: _____

POWER PHASE: _____

PUMP(S) SIZE: _____

IMPELLER: _____

CALCULATION FORMULA

D2x 3.14/4 = _____ Surface Area (ft.2)

Ft.2 x Depth _____ Cubic Feet

Cu. Ft. x 7.48 _____ Gallons

Gal. / Time _____ GPM

(7.48 GAL. PER CU.FT - WATER)

PUMP #1 (LEAD)

PUMP ON: _____

PUMP OFF: _____

TIME: _____

LEVEL DROP: _____

GALLONS PER MINUTE _____

PUMP #2 (LAG)

PUMP ON: _____

PUMP OFF: _____

TIME: _____

LEVEL DROP: _____

GALLONS PER MINUTE _____

PROJECT REP: _____

CONTRACTOR REP: _____

PI PENTREE, INCORPORATED
CONSULTING ENGINEERS

1428 Main St.
P.O. Box 1309
Princeton, WV 24740-1309
Phone: (304)-431-7800
Fax: (304) 425-0445

PROJECT: _____

PROJECT#: _____

CONTRACT#: _____

CONTRACTOR: _____

WATER METER LOG SHEET
(IF REQUIRED BY OWNER)

	CUSTOMER	METER#	SHEET#	LOCATION	PARCEL#	DATE
1)						
2)						
3)						
4)						
5)						
6)						
7)						
8)						
9)						
10)						
11)						
12)						
13)						
14)						
15)						
16)						

PI PENTREE, INCORPORATED
CONSULTING ENGINEERS

1428 Main St.
P.O. Box 1309
Princeton, WV 24740-1309
Phone: (304)-431-7800
Fax: (304) 425-0445

PROJECT: _____

PROJECT#: _____

CONTRACT#: _____

CONTRACTOR: _____

PROJECT PUNCH LIST

1.) _____

2.) _____

3.) _____

4.) _____

5.) _____

6.) _____

7.) _____

8.) _____

9.) _____

10.) _____

11.) _____

12.) _____

COMMENTS: _____

DATE: _____

CONTRACTOR'S SIGNATURE: _____

ENGINEER'S REPRESENTATIVE SIGNATURE: _____

MEMORANDUM

Re: Discuss onsite inspection policy and process

To: Jefferson County PSD Board Members & Professionals

Date: September 6, 2018

Preparers: April Shultz, General Manager

Background:

Chairman, Roger Forshee requested this agenda item. Mr. Forshee is concerned that the District may not have a documented process or qualified engineers performing site/other inspections.

The District used to utilize Specialized Engineering to perform inspections on mainline installations. Specialized Engineering would conduct daily inspections and provide a written report describing the installation and events that took place on site for each day.

In 2017, at the start of Phase II at Aspen Greens, the District's Engineering Technician, Travis Markley, began performing the daily site inspections for the sanitary installation. He performed site inspections at his previous jobs for Thrasher Engineering and Greenway Engineering. Mr. Markley created an inspection report template for the District that he utilizes to describe the installation documenting the events and the progress that took place on site for each day.

Mr. Forshee has stated he would like to ensure that the District's system and inspections complies with all documented requirements and/or specifications. He sent staff a picture of a manhole cover (behind this memo) questioning if it is an approved cover. In the District's specification and standards, it lists Capitol Foundry of VA, Inc. and East Jordan Iron Works as approved vendors (behind this memo). Staff informed Mr. Forshee the manhole covers that he recently brought to the District's attention are watertight and bolted down, which is considered an "approved equal", despite the country of origin. In 2016, the District started specifying 2 manhole frame and covers that are made in USA but an approved equal does not have to be. Staff also informed Mr. Forshee that the District doesn't discriminate against an approved equal frame and cover, as long as it is watertight and bolted, it is acceptable.

Mr. Forshee has several other concerns he will address at the meeting.

Action:
Staff is not aware of any action at this time.

CHESAPEAKE FOUNDRIES INC.
SANITARY
SEWER
INDIA

CAPITOL FOUNDRY OF VA, INC.

2856 CRUSADER CIRCLE
VIRGINIA BEACH, VA 23453
PHONE: (757) 427-9431
FAX: (757) 427-9308
EMAIL: capitolfoundry@hotmail.com

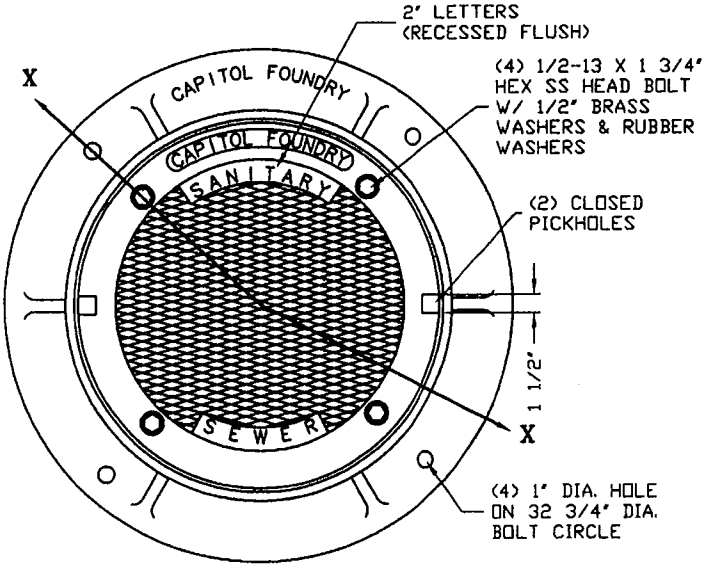

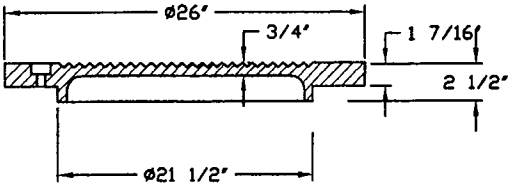

COVER SECTION X-X

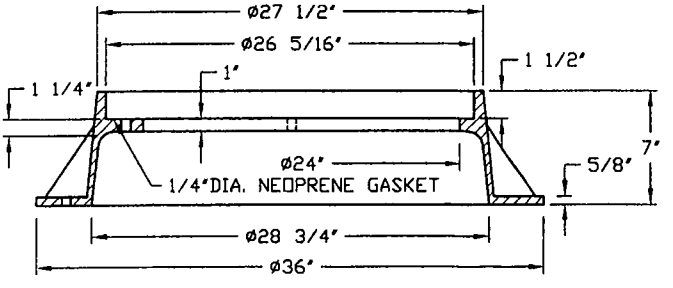

FRAME SECTION X-X

AVAILABLE MADE IN USA

STANDARD 24" BOLTED WATERTIGHT MANHOLE FRAME & COVER

MATERIAL SPEC: GRAY IRON ASTM-A48 CLASS 35B	**ITEM #MH-1678*JC-WT**

1040APT 1045ZPT Assembly

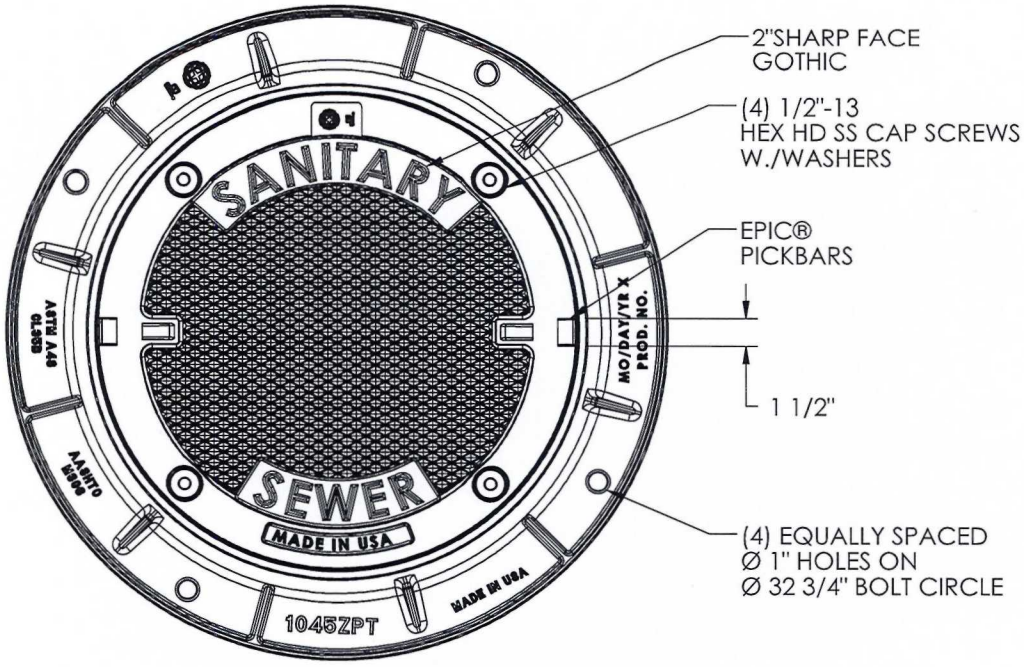

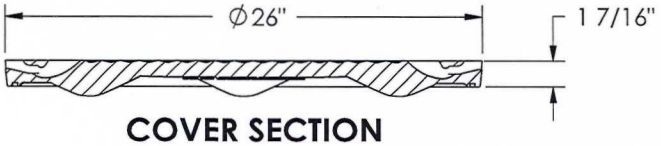

COVER SECTION

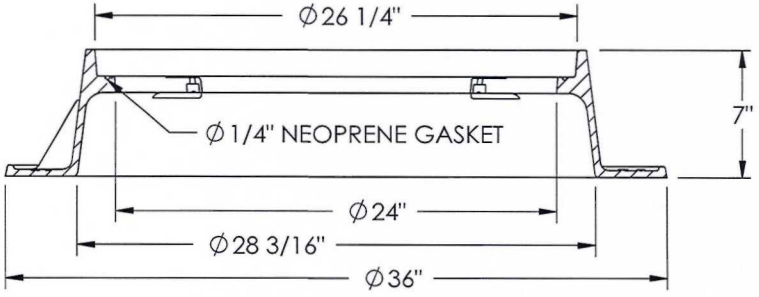

FRAME SECTION

Product Number
00104509

Design Features
-Materials
Cover
Gray Iron (CL35B)
Frame
Gray Iron (CL35B)

-Design Load
Heavy Duty
-Open Area
n/a
-Coating
Dipped
-√ Designates Machined Surface

Certification
-ASTM A48
-
-
-Country of Origin: USA

Major Components
00104174
00104512

Drawing Revision
9/1/2009 Designer: DVDS-VP
06/06/2013 Revised By: DAE

Disclaimer
Weights (lbs/kg), dimensions (inches/mm) and drawings provided for your guidance. We reserve the right to modify specifications without prior notice.

CONFIDENTIAL: This drawing is the property of EJ Group, Inc. and embodies confidential information, registered marks, patents, trade secret information, and/or know-how that is the property of EJ Group, Inc. Copyright © 2012 EJ Group, Inc. All rights reserved.

Contact
800 626 4653
ejco.com

MEMORANDUM

Re: Discuss grease trap inspection policy and process

To: Jefferson County PSD Board Members & Professionals

Date: September 8, 2018

Preparers: April Shultz, General Manager

Background:
Chairman, Roger Forshee requested this agenda item. The District uses the Sanitary Specifications and Standards in conjunction with the Sewer Use Ordinance District for grease traps requirements. Staff performs monthly grease trap inspections to several of its commercial customers and submit that information to the City of Charles Town. A copy of the monthly inspection list is included behind this memo. Also included is the section from both the District's Sewer Use Ordinance and Sanitary Sewer Specifications and Standards regarding grease traps.

Action:
Staff is not aware of any action at this time.

MONTHLY GREASE TRAP INSPECTION CHECK OFF LIST
September 2018

Facility Name	Passed	Failed	(if failed) Recommendation
Applebee's	____	____	_____
Ginza Japanese	____	____	_____
Great Wall	____	____	_____
Jersey Mike's	____	____	_____
Martins	____	____	_____
Moose	____	____	_____
New China	____	____	_____
Sheetz	____	____	_____
Taco Bell	____	____	_____
I Hop	____	____	_____
Genesis Health	____	____	_____
Turf	____	____	_____
Kings	____	____	_____
CARS	____	____	_____
Driswood	____	____	_____
Jeff High	____	____	_____
Wildwood	____	____	_____
TA Lowery	____	____	_____
Job Corp	____	____	_____
Pizza Hut	____	____	_____
Apple Valley Waste	____	____	_____
Blakeley St. Bakery	____	____	_____
John's Café'	____	____	_____
Bus Garage	____	____	_____

MONTHLY GREASE TRAP INSPECTION CHECK OFF LIST
September 2018

Popeyes	_____	_____	_____
Papa Johns	_____	_____	_____
Hampton	_____	_____	_____
Home2Suites	_____	_____	_____

the General Manager permits the pretreatment or equalization of waste flows, the design and installation of the plants and equipment shall be subject to the review and approval of the General Manager.

6. Sand/grit interceptors shall be provided when, in the opinion of the General Manager, they are necessary for the proper handling of liquid wastes containing sand or grit, or other harmful ingredients: except that such interceptors shall not be required for private living quarters or dwelling units. All interceptors shall be of a type and capacity approved by the District's Manager and shall be located as to be readily and easily accessible for cleaning and inspection. In the maintaining of these interceptors, the owner(s) shall be responsible for the proper removal and disposal by appropriate means of the captured material and shall maintain records of the dates, and means of disposal which are subject to review by the District's Manager. Any removal and hauling of the collected materials not performed by owner(s)' personnel must be performed by currently licensed waste disposal firms.

7. All commercial and industrial facilities dealing with grease shall, at the user's expense and as required by the District. The following defines the responsibilities of the users of the Jefferson County Public Service District sanitary sewer system for pretreatment of FOG (Fat, Oil and Grease).[7]

Control Plan for Fats, Oil, Grease (F.O.G.) and Food Waste:

1. Any new construction, renovation, or expansion of Food Service Facilities shall be required to submit to the District a FOG and food waste control plan that will effectively control the discharge of undesirable materials into the wastewater collection system.

2. Any existing Food Service facilities shall also be required to submit a FOG and food waste control plan that will effectively control the discharge of undesirable materials into the wastewater collection system. Existing facilities shall not be exempt from the requirements of this ordinance. There will be no "Grandfathering."

a. Provide an adequately sized grease interceptor according to the requirements for grease trap sizing and the design criteria provided at Section 9.

b. Locate the grease trap outside the building upstream from the sanitary sewer service lateral connection. This will allow easy access for inspection, cleaning, and removal of the intercepted grease at any time. A grease trap may

[7] Revision to Article V, Conditions of Use of the Public Sewer, #7, 7.1, 7.2, 7.2.a. 7.2.b, 7.2.c, 7.2.c.1-7, was approved by Board 9-8-08.

not be installed inside any part of a building without written approval by the Jefferson County Public Service District.

c. **Grease Trap Maintenance and Record Keeping**:

1. Cleaning/Pumping: The user at the user's expense shall maintain all grease traps to assure proper operation and efficiency and maintain compliance with the District's pass through limits. Maintenance of grease trap shall include the complete removal of all contents, including floating materials, wastewater, and bottom sludge and solids. This work shall be performed by a qualified and licensed hauler. Decanting or discharging of removed waste back into the trap from which it was removed or any other grease trap, for the purpose of reducing the volume to be disposed, is prohibited. This service shall also include a thorough inspection of the trap and its components. Any needed repairs shall be noted. Repairs shall be made at user's expense.

2. Disposal: All waste removed from each grease trap must be disposed of at a facility approved to receive such waste in accordance with the provisions of this program. In no way shall the pumpage be returned to any private or public portion of the District's sanitary sewer collection system. All pumpage from grease traps must be tracked by a manifest, which confirms pumping, hauling, and disposal of waste. The customer must obtain and retain a copy of the original manifest from the hauler.

3. Obtain a written grease interceptor service agreement with a licensed transporter for the establishment to maintain the interceptor in effective operating condition and provide copy of same to the District. A service agreement must be in effect as long as the facility has a Grease Trap Permit.

4. Unless otherwise specified by the District, service the interceptor every ninety (90) days and maintain backup copies of trip tickets and a service log, on the premises of the facility, for at least five (5) years.

5. Service/Maintenance Log: A grease trap cleaning/maintenance log indicating each pumping for the previous 5 years shall be maintained by each Food Service Facility. This log shall include the date, time, amount pumped, hauler, and disposal site and shall be kept in a conspicuous location for inspection. Said log shall be made available to

the Jefferson County Public Service District General Manager or their representative upon request.

6. Report to the District biannually documenting compliance with this ordinance regarding items 1 through 5. The reports shall be due on March 1 for August through January and September 1 for February through July.

The maintenance records shall include the following information:

A. Facility name, address, contact person, and phone number

B. Company name, address, phone number, and contact name of person responsible for performing the maintenance, cleaning, pumping, or repair of grease trap.

C. Types of maintenance performed.

D. Dates maintenance was performed.

E. Date of next scheduled maintenance.

F. Copies of manifests.

7. Allow demand inspection of the facility and of records by District representatives during reasonable hours.

8. The following are prohibited from grease interceptors:

a. Where oil and grease are a byproduct of food preparation and/or cleanup, reasonable efforts shall be made to separate waste oil and grease into a separate container for proper disposal. Except as contained in byproducts of food preparation and/or cleanup, waste oil and grease shall not be discharged to any drains or grease interceptors. Such waste shall be placed in a container designed to hold such waste and either utilized by industry or disposed of at suitable locations.

b. None of the following agents shall be placed directly into a grease interceptor, or into any drain that leads to the interceptor:

i. Emulsifiers, de-emulsifiers, surface active agents, enzymes, degreasers, or any type of product that will liquefy grease interceptor wastes.

ii. Any substance that may cause excessive foaming in the POTW.

iii. Any substance capable of passing the solid or semi-solid contents of the grease interceptor to the POTW.

c. The influent to interceptors shall not exceed 140 degrees Fahrenheit (140° F). The temperature at the inlet tee shall be considered equivalent to the temperature of the influent.

d. Only those plumbing fixtures into which the grease and fats are discharging shall connect to the grease interceptors. Toilets, urinals, and other similar fixtures shall not discharge through a grease interceptor.

e. All waste shall only enter the grease interceptor through the inlet flow control device, then the inlet pipe.

f. Garbage grinders/disposers: It is recommended that solid food waste products be disposed of through conventional solid waste/garbage disposal means. If a grinder/disposal is used it must be connected to the grease trap. The use of grinders is discouraged since it decreases the operational capacity of the grease trap and will require an increased pumping frequency to ensure continuous and effective operation.[8]

8. All commercial, institutional or public authority customer shall follow the most recent United States Environmental Protection Agency's (EPA) recommended best management practices, (BMP) for the disposal of pharmaceuticals and personal care products (PPCP).

Design Criteria:

1. Construction: Grease traps shall be constructed in accordance with Jefferson County Public Service District standards and shall have a minimum of two compartments with fittings designed for grease retention. All grease removal devises or technologies shall be subject to the written approval of the District. Such approval shall be based on demonstrated removal effectiveness of the proposed technology.

[8] Revision to Article V, Conditions of Use of the Public Sewer, #8, Item f, was approved by Board 9-8-08.

2. Access: Access to grease traps shall be available at all times, to allow for their maintenance and inspection. Access to trap shall be provided by two manholes (one on each compartment) terminating at finished grade with cast iron frame and cover.

3. Load-Bearing Capacity: In areas where additional weight loads may exist, the grease trap shall be designed to have adequate load- bearing capacity. (Example: vehicular traffic in driving or parking areas).

4. Inlet and Outlet Piping: Wastewater discharging to a grease trap shall enter only through the inlet pipe of the trap. Each grease trap shall have only one inlet and one outlet pipe.

5. Sizing of grease traps shall be based on loading in accordance with the Uniform Plumbing Code, Appendix H, as amended from time to time, but in no case shall they be smaller than 1000 gallons in capacity.[9]

Number of meals Per Peak hour (1)	x	waste flow rate (2)	x	retention time (3)	x	storage factor (4)	=	Size requirement. (liquid capacity)

Factors:

1) Number of meals served at peak operating hour (Seating Capacity) x Peak Factor
   a. Where Peak Factor for Fast Food Restaurant is.....1.33
   b. And, Peak factor for all other food service types is.....1.00

2) Waste Flow Rate:
   a. With Dishwasher.....6 gallon flow
   b. Without Dishwasher.....5 gallon flow
   c. Single Service kitchen.....2 gallon flow
   d. Food waste disposer.....1 gallon flow

3) Retention Times
   a. Commercial kitchen waste/dishwasher.....2.5 hours
   b. Single service kitchen/single serving.....1.5 hours

4) Storage Factors
   a. Fully equipped commercial kitchen.....8 hr operation = 1
   b. .....16 hr operation = 2
   c. .....24 hr operation = 3

[9] Revision to Article V, Conditions of Use of the Public Sewer, #8.5, was approved by Board 9-8-08.
[9] Addition to Article V, Conditions of Use of the Public Sewer, #8, Pass Through Limits, was approved by Board 9-8-08.

d. Single Service Kitchen.....=1.5

The Uniform Plumbing Code includes a built-in safety factor that can yield very large grease trap size specifications. At this time, the District is not requiring traps larger than 4000 gallons. However, the decision to use a trap smaller than that specified by the formula and calculations above shall be addressed in the plan submission.

Pass Through Limits:

No User shall allow wastewater discharge concentration from grease trap to exceed 100 MgPL (milligrams per liter) as identified by EPA method 1664A.[10]

9. All construction activities must be completed in accordance with the Uniform Plumbing Code. Additionally, the following specifications must be incorporated into grease trap design.

a. The grease interceptor shall be constructed with a minimum of two equal sized chambers or shall have a minimum of two equal sized tanks in series. If two chambered, the dividing wall must extend to within one (1) foot of the bottom of the tank and within two (2) inches of the top and be securely fastened to both sides.

b. There must be inlet and outlet tees made of schedule 40PVC installed. The inlet tee should extend down approximately one-third the depth of the trap from the top and the outlet tee should be located twelve to eighteen inches off of the bottom of the trap.

c. Grease interceptors are to be installed at a minimum a distance of 10 ft. and a maximum distance of 30 ft. from sinks and dishwashers to allow for adequate cooling of wastewater and compliance with West Virginia Bureau of Public Health regulations. Water temperatures must be less than 140 degrees F. prior to entering grease interceptor.

d. All grease bearing waste streams should be routed through an appropriate grease trap/interceptor, including: sinks, soup kettles, dishwashers and floor drains. Floor drains are prohibited without written approval of the District. Approved floor drains which discharge or have the potential to discharge grease will be required to be routed through the grease trap.[11]

Exceptions: Drains that receive "clear waste" only, such as from ice machines, condensate from coils and drink stations, may be plumbed to the sanitary system

[11] Revision to Article V, Conditions of Use of the Public Sewer, #9, Item d, was approved by Board 9-8-08.

without passing through the grease interceptor with the condition that the receiving drain is a "hub" type that is a minimum of two inches above the finished floor.

10. Nitrates and Phosphorous. Users shall limit the introduction of nitrates and phosphorous, or provide pre-treatment for the same, in a manner which will permit the District to meet applicable effluent discharge limits, as established and amended from time to time, but in no case shall they exceed the limits established in section V.4.k of this document.[12]

11. Where pretreatment or flow-equalizing facilities are provided or required for any waters or wastes, they shall be maintained continuously in satisfactory and effective operation by the owner(s) at his expense.

12. The owners of any property serviced by a building sewer carrying industrial wastes shall install a suitable structure together with such necessary meters and other appurtenances in the building sewer to facilitate observation, sampling and measurement of the wastes. Such structure shall be accessible and shall be safely located and shall be constructed in accordance with plans approved by the District and the General Manager. The structure shall be installed by the owner at his expense and shall be maintained by him so as to be safe and accessible at all times.

13. The General Manager may require a user of sewer services to provide information needed to determine compliance with this Ordinance. These requirements may include:

a. Wastewater discharge peak rate and volume over a specified time period.

b. Chemical analysis of wastewaters.

c. Information on raw materials, processes, and products affecting wastewater volume and quality.

d. Quantity and disposition of specific liquid, sludge, oil, solvent, or other materials important to sewer use control.

e. A plot plan of sewers for the user's property showing sewer and pretreatment facility location.

f. Details of wastewater pretreatment facilities.

[12] Revision to Article V, Conditions of Use of the Public Sewer, #10, was approved by Board 4-7-08.

g. Details of systems to prevent and control the losses of materials through spills to the municipal sewer.

14. All measurements, tests and analysis of the characteristics of waters and wastes to which reference is made in this ordinance shall be determined in accordance with the latest edition of "Standard Methods for the Examination of Water and Wastewater," published by the American Public Health Association at 40 CRF 136, as amended from time to time. Sampling methods, location, times, durations, and frequencies are to be determined on an individual basis subject to approval by the General Manager.

15. No statement contained in this section shall be construed as preventing any special agreement or arrangement between the District and any industrial concern whereby an industrial waste of unusual strength or character may be accepted for treatment subject to payment therefore at rates established by the District.

16. Accidental Discharges. The accidental discharge of any prohibited waste into any sewer shall be reported to the General Manager by the person responsible for the discharge, or by the owner or occupant of the premises where the discharge occurs, immediately upon obtaining knowledge of such discharge so that steps may be taken to minimize its effect on the treatment plant.

17. Exempt Meters. Bills shall be based upon metered water usage whenever possible. The installation of an Exempt Meter for a residential customer is permitted provided: (1) the Exempt Meter and all appurtenant facilities are subject to the District's initial and subsequent inspection to confirm that potable water is not returned to the sanitary sewer system; (2) the customer's water utility is willing to install from a tap on the water main that is not the same tap as the house meter uses, the Exempt Meter and institute billing practices so that the District does not create a sewer bill for the Exempt Meter and the District does not share in meter reading costs for the Exempt Meter; (3) the City of Charles Town exempts the District from paying for bulk sewer service for potable water passing through the Exempt Meter. The District will not impose sanitary sewer charges on potable water passing through an Exempt Meter. Deduct meters for residential customer will be permitted to continue in operation to serve a current customer until such customer sells or moves out of its location, at which time such practice will be discontinued. Exempt Meters for residential customer will be permitted to continue in operation to serve a current customer until such customer sells or moves out of its location, at which time such practice will be discontinued, unless the Exempt meter is connected to a tap on the main that is not the same tap as the house meter uses. The District shall inform residential customers who presently have deduct or Exempt Meters that are from the same tap as the house meter, that such arrangements will be discontinued upon the change in the customer. The Board of the District shall

consider on a case by case basis requests for deduct or Exempt Meters for commercial or industrial customers.[13]

ARTICLE VI

MISCELLANEOUS

1. Protection from Damage

No unauthorized person shall maliciously, willfully, or negligently break, damage, destroy, uncover, deface, or tamper with any structure, appurtenance, or equipment which is a part of the wastewater facilities. Any person(s) violating this provision shall be subject to applicable civil and criminal liability.

2. Powers and Authority of Inspectors

a. The General Manager and other duly authorized employees of the District bearing proper credentials and identification shall be permitted to enter all properties for the purposes of inspection, observation, measurement, sampling, and testing pertinent to discharge to the sewer system in accordance with the provisions of this Ordinance.

b. The General Manager or other duly authorized employees of the District are authorized to obtain information concerning industrial processes which have a direct bearing on the kind and source of discharge to the wastewater collection system. The industry may withhold information considered confidential. However, the industry must establish that the revelation to the public of the information in question might result in an advantage to competitors.

c. While performing the necessary work on private properties referred to in Section 2a above, the General Manager or duly authorized employees of the District shall observe all safety rules applicable to the premises established by the company, and the company shall be held harmless for injury or death to the District's employees, and the District shall indemnify the company against loss or damage to its property by their respective employees and against liability claims and demands for personal injury or property damage asserted against the company and growing out of the gauging and sampling operation, except as such may be caused by negligence or failure of the company to maintain safe conditions as required in Article V 8.

d. The General Manager and other duly authorized employees of the District bearing proper credentials and identification shall be permitted to enter all private

[13] Revision to Article V, Conditions of Use of the Public Sewer, #17, was approved by Board 11-4-13.

Section 406.00

* Grease Interceptor

Any and all commercial establishments dealing with food preparation, automotive/mechanical repairs, or any business handling grease by-products shall install an adequately sized grease interceptor to remove grease from the wastewater stream prior to discharging into the public sanitary sewer system. A separate line from kitchen facilities, wash-up areas, and floor drains shall be piped into the grease interceptor. This interceptor shall comply with WVBPH standards.

Plumbing plans must be submitted to and approved by the JCPSD before construction begins. Refer to the JCPSD Sewer Use Ordinance for sizing of grease traps based on loading in accordance with the Uniform Plumbing Code, Appendix H. The Uniform Plumbing Code includes a built-in safety factor that can yield very large grease trap size specifications. At this time, the District is not requiring traps larger than 4000 gallons. However, the decision to use a trap smaller than that specified by the formula and calculations above is to be addressed in the plan submission. The minimum required grease trap shall be of 1,000-gallon capacity.

Should damages be done to wastewater lines due to improper maintenance of the grease interceptor, the JCPSD shall recover all costs incurred from the property owner for repairs and/or replacement to the wastewater lines and appurtenances.

Section 406.10

Sizing Grease Interceptors

Sizing of Grease traps shall be based on loading in accordance with the Uniform Plumbing Code, Appendix H, but in no case shall they be smaller than 150 gallons in capacity.

Number of Meals Per Peak Hour	X	Waste flow Rate	X	Retention Time	X	Storage Factor	=	Size Requirement Liquid Capacity
Step 1		Step 2		Step 3		Step 4		Step 5

Steps:

1) Number of meals served at peak operating hour:
   Seating Capacity x Peak Factor
   - a. Where Peak Factor for Fast Food Restaurant is..... 1.33
   - b. And, Peak Factor for all other food service types is 1.00
2) Waste Flow Rate:
   - a. With Dishwasher..... 6-gallon flow
   - b. Without Dishwasher..... 5-gallon flow
   - c. Single Service kitchen..... 2-gallon flow
   - d. Food waste disposer..... 1-gallon flow
3) Retention Times
   - a. Commercial kitchen waste/dishwasher..... 2.5 hours
   - b. Single service kitchen/single serving..... 1.5 hours
4) Storage Factors
   - a. Fully equipped commercial kitchen (8 hr operation) 1
   - b. Fully equipped commercial kitchen (16 hr operation) 2
   - c. Fully equipped commercial kitchen (24 hr operation) 3
   - d. Single Service Kitchen 1.5

The Uniform Plumbing code includes a built-in safety factor that can yield very large grease trap size specifications. At this time, the District is not requiring traps larger than 4000 gallons. However, the decision to use a trap smaller than that specified by the formula and calculations above is to be addressed in the plan submission.

MEMORANDUM

Re: Discuss topics for the next newsletter edition

To: Jefferson County PSD Board Members & Professionals

Date: September 6, 2018

Preparers: April Shultz, General Manager

Background:
Treasurer, Todd Milliron requested this agenda item. District staff posted the first newsletter on its website at the end of April. The Board should discuss what topics to add to the next newsletter edition.

Action:
Staff is not aware of any action at this time.

MEMORANDUM

Re: Discuss the District's status on16-0616 Project

To: Jefferson County PSD Board Members & Professionals

Date: September 6, 2018

Preparers: April Shultz, General Manager

Background:
Treasurer, Todd Milliron requested this agenda item. The Board voted to put this approved PSC project on an indefinite hold at the December 7, 2017 special board meeting.

Action:
Staff is not aware of any action at this time.

MEMORANDUM

Re: Update on JCPSD transition to City of Charles Town
- Update on billing system transfer to Charles Town
- Discuss staffing

To: Jefferson County PSD Board Members & Professionals

Date: September 6, 2018

Preparers: April Shultz, General Manager

Background:
District staff was unable to meet with Charles Town last month regarding the billing system transfer due to their IT staff being out of the office for personal reasons. He is now back in the office and the District's IT staff is coordinating a meeting to discuss the transfer of information.

Action:
Staff is not aware of any action at this time.

MEMORANDUM

Re: Update on status of current legal cases

To: Jefferson County PSD Board Members & Professionals

Date: September 6, 2018

Preparers: April Shultz, General Manager

Background:

Consolidated cases 17-0195-PSWD-PC (Dissolution Case) & 18-0006-PSD-C (Complaint Case):
There have been no updates on the appeal since last month. District legal counsel, Mrs. Susan Riggs, has been working with the legal counsel of both the Jefferson County Commission and Charles Town on a response that is due on or before September 10th.

Action:
Staff is not aware of any action at this time.

GENERAL MANAGER'S REPORT
for Occurrences During August, 2018
For September, 2018 Board Meeting

Below are updates on items we have been involved in this month.

Glen Haven & Cavaland Water Systems:

Last Month: Staff has had no major issues at either system this month.

This Month: Staff has had no major issues at either system this month.

Pump Stations and Collection System:

Last Month:
Mr. Freeze has started getting quotes to reline the wetwell and repairs/upgrades for 4-2. He has received 2 quotes to do the repairs/upgrades and 1 to reline the wetwell. These will be discussed earlier in the meeting.

Staff has also recognized that both pumps at pump station 3-9 need to be replaced as the original ones are wearing down. Staff received a quote from Marcum Pump to replace them with Keen pumps rather than Flygt pumps for about $22,000 for both. Currently Pump B is out of service and we are now having problems with Pump A so a Godwin Pump has been placed at this station to keep it in service. Staff has ordered the new pumps.

This Month:
The Board approved last month the relining of pump station 4-2 with material that provides the best value and warranty not to exceed $20,000. Mr. Freeze received three quotes, one from Lyttle ($17,144), one from Core & Main ($17,284), and the last from Industrial Services Group ($41,300). As previously stated in the pump station repairs/upgrade memo, Charles Town's recommendation it to use Lyttle for the relining at 4-2.

Since we have recently had issues at pump station 3-9 and 4-4, the staff decided to discuss pump station repairs/problems at the maintenance staff meeting on Monday. We will be discussing the pump station repairs that are needed and begin prioritizing them so that any and all field related issues are addressed and completed as soon as possible.

Deerfield Sewage System:

Last Month:
Staff received a quote from Snyder Environmental for replacing the 2" piping at the plant since they initially installed the system. They will work on a time & materials basis; with a full crew and one day for each pump vault at a rate of $350.00 / hour.

This Month:
Snyder Environmental has replaced the piping at the plant. Mr. Freeze said his maintenance staff will now have to rake out the beds at the plant.

Classes & Meetings of Interest:
This Month:
Classes: None this month.

Meetings: None this month.

Vehicles & Equipment:

This Month:

No issues this month.

Other issues:

Consolidation with Charles Town:

This month:

District staff and Neal Nilsen have contacted David Martin at Charles Town to set up a meeting to discuss the software conversion process.

Development/New Customer Information:

This Month:

The District did not receive any new service requests for over 3 EDUs.

Financial Audit Update:

This month:

Yount, Hyde and Barbour were on site August 20-24 to begin their field work for the audit. YHB will be sending management a list of items needed in order for them to finalize audit fieldwork. Once complete, the financial report will go through the quality control review process. Once that review is complete, they will email a draft to management for review and approval. The auditors stated that "they prefer to have all audit testing complete before sending preliminary issues or topics for discussion (to ensure that a complete listing is presented)." The auditors plan to attend the October 3rd board meeting.

Employee Update:

This month:

Unfortunately, one of our Maintenance Technician's submitted his two week resignation notice effective September 7, 2018. I wanted to wait until November 1st to consider a new hire to see if there has been any progress with the consolidation, but Operations Manager has requested that someone is hired immediately. I contacted Kristen Stolipher at Charles Town to see what their thoughts are about hiring a new employee and her recommendation is as follows, "As with any employee leaving, your operations should be evaluated to determine whether daily operations can be handled by the existing staff. In the event that schedules and rotations can't be modified to take care of daily operations then we might want to discuss some assistance from CTUB and possibly use this opportunity for some cross-training."

Inflow & Infiltration Update:

This month:

Staff met Mrs. Stolipher at PS 4-4 to address concerns regarding I&I and a flowmeter has been installed to monitor flows.

PSD Training Update:

This month:

Staff contacted the PSC regarding on-site training as requested by the Board last month. David Acord, Public Utilities Director at the PSC, sent a response that follows this memo with training options.

Webpay Update:

This month:

I contacted Neal about options for improving our webpay last month. He emailed the Board with the following recommendation:

> "Board; April has accurately summed up a hi level response of the system issues, limitations, UI design, and workaround's that lead to PSD staff and customers frustration's.
> What I would add in response...;
>
> - I monitor the webpay server in real-time, receive alerts to a failure, and respond behind the scenes to mask/or minimize issues seen by staff and customers.
> - We have no control over the user interface (UI) that is presented to the customer.
> - In the past, we have successfully worked with the software vendor, and credit card processor to implement changes to the UI and it's secure operation.
>
> I can open a case with Accufund and request an RFP for UI re-design, however, in my opinion, based on the current planning for transition, I recommend that focus be placed on data migration to the CTUB billing system to assure a seamless migration.

Additionally, I went to our website and followed our step by step instructions to make my online payment last month to ensure that our instructions are correct. I did not have any issues.

Next Regular Board meeting will be on Wednesday, October 3, 2018 @ 7:00 pm at our office.

Ashley Stottlemyer

From: Acord, David <DAcord@psc.state.wv.us>
Sent: Tuesday, September 04, 2018 1:23 PM
To: Ashley Stottlemyer
Cc: Nelson, Bill; Tincher, Nancy
Subject: RE: PSC Training

Ashley,

It was nice speaking with you this morning. I offer this as a follow-up to our discussions:

1) The Water and Wastewater Division is able to provide on-site assistance/training which typically focuses on the respective PSC Water & Sewer Rules (and WV Code if applicable). Areas typically covered include:

- Applications for service
- Security deposits
- Billing information
- Leak adjustments
- Deferred Payment Plans
- Termination process

In the past this on-site assistance is typically 2 to 3 hours depending upon particular items of interest and related questions. It normally focuses on particular Rules and will not involve any discussions on active formal cases involving the Commission.

2) We also provide assistance to utilities with any questions they have via phone. A list of contacts is provided via the following link:

http://www.psc.state.wv.us/scripts/Directory/ww.cfm

Assistance questions should be directed to one of the Utilities Analysts (or Bill Nelson or me). Should the request be more technical in nature we may provide additional contacts in the PSC Engineering Division.

3) If a situation is more complicated and you prefer a response in writing you may contact us via email. Use the link above and just click on the name of the staff member you wish to contact. We will then review the question and respond to you via email, if needed.

4) We also have several upcoming seminars which the District's Board may wish to send its staff:

- PSD Board Members Seminar: Scheduled for Sept 20-22, 2018, in South Charleston, WV (last day to register is Sept. 6, 2018)
- Utility Office Works Seminar: Scheduled for October 16, 2018, in Sutton, WV (last day to register is October 2, 2018)

Additional information regarding the seminars is available below:

http://www.psc.state.wv.us/scripts/SeminarRegistration/default.cfm

Seating is limited so I would encourage those interested to register early.

5) We are also currently planning seminars for 2019 so there will be additional training opportunities next year. Information regarding 2019 seminars should be available by this coming December via our Pipeline newsletter.

Please discuss with your board and feel free to contact me should you have additional questions, etc.

Thanks,
Dave

David L. Acord, II
Public Utilities Director
Water & Wastewater Division
Public Service Commission of West Virginia
201 Brooks Street
P.O. Box 812
Charleston, WV 25323
(304) 340-0366
Fax: (304) 340-3759
dacord@psc.state.wv.us

The information contained in this message is provided as assistance from the Water and Wastewater Division of the Public Service Commission of WV (Commission), and as such, the contents therein are not binding on Staff or the Commission in its decision-making, should a formal case arise related to this information.

From: Ashley Stottlemyer [mailto:admasst@jcpsd.com]
Sent: Tuesday, September 4, 2018 9:57 AM
To: Acord, David
Subject: FW: PSC Training

Hello Mr. Acord,

My Board of Directors has asked me to contact the PSC to see if your office offers any kind of on-site training for staff, the Board, and other local interested parties. Does your office do any kind of training like this on rules, procedures, statutes, etc of a PSD?

Operation Managers Report
August 2018

Pump Stations:

8/1 P.S.4-2. Jim from Jim's Auto torched the bolts out of the flange for the old Godwin connection so that a newer flange can be bolted up.

8/6 P.S.4-5, Pulled "B" pump and replaced it with a spare.

8/11 P.S.4-4, High level due to both pumps being tripped out. The OmniSite looks as if the face pad is burned out. The pumps reset ok.

8/13 P.S.4-4, Replaced "A" side capacitors and the off and lead floats.

8/15 P.S.1-11, Replaced capacitors "A" side.

8/16 P.S.4-4, Met with Robert from AR&E. He tested the wires on both pumps and said "B" pump windings were burned up. And "A" pump would go bad shortly.

8/17 P.S.3-7, Replaced the transducer.

8/17 P.S.4-4, Removed "A" pump and took it to Biedlers for repair.

8/20 P.S.4-4, "A" pump went bad. Dodson removed 2 loads from the station. We bought the Godwin from 4-5 to 4-4 and hooked it up. Pulled pump "A" and ordered a replacement pump from Fluid Solutions.

8/22 P.S.4-5, Removed rags and solids from check valve "A".

8/24 Removed grease and rags from pump station 2-14 and 3-6.

Collection System:

8/10 Country Side Vet. Sewer back up. We were able to open their line with our snake.

8/10 97 Sternway sewer back up found to be on the owner.

8/15 39 cut offs for Charles Town.

8/16 11 cut offs for JUI.

Grease traps inspections:

8/20 Completed grease trap inspection for 4 Schools and 20 Commercial grease traps.

Water Systems:

8/16 2 cut offs for Cavaland and 1 for Glen Haven.

8/19 Collected the Quarterly Nitrate sampling at Cavaland.

Inspections:

8/15 Jefferson Crosing Appartments Lot # 1-C.

8/17 Briar Run Lot # 398,399,400,401,402 and 403.

Trucks:

8/28 2008 GMC, Replaced rear brakes.

Technology Report for August 2018

Travis Markley

Engineering:

Received concept plan for mixed use sub-division proposed to be constructed along route 340. It was determined that the sanitary service will be provided by Charles Town.

Met Kristen Stolipher at PS 4-4 to address her concerns regarding I&I; Installed flowmeter at Manhole CG-1 to monitor flows coming into PS 4-4.

Made multiple trips to PS 4-4 with field staff to diagnose control panel issues.

Performed site visit to Walnut Grove regarding a waterline leak that was being repaired by JUI. Monitored and communicated to the repair crew where the District's sanitary line was to avoid disturbance to the sanitary main.

Helped mobilize the Godwin portable pump to PS 4-4 to bypass wet well pumps for replacement.

Answered ample questions by Roger Forshee, regarding manhole covers, inspection reports, inspection processes, and the PSD standards and specifications.

Received site plan for Teema facility requesting the approval of allowing a canopy to constructed over existing sanitary sewer main traversing the Teema lot. Currently under review.

Performed site visit to 637 Jefferson Avenue regarding the customer requesting the need to mobilize a mobile home from the lot; instructed the resident to cut and cap the existing sewer prior to mobilizing the home.

GIS:

Assisted field staff with multiple Miss Utility Calls.

Prepared an exhibit for Todd Milliron displaying information about the improvement project and flow alignment from Shenandoah Junction to the Evitts Run Interceptor.

Added customers to the GIS database located near Jefferson Avenue.

Safety Management:

On August 23, 2018 Robbie Shipe was performing a standard pump run time check at Pump Station 4-5. He was standing on the concrete pad just in front of the control panel to read the pump run times. He was holding a clipboard and writing the run times onto paper. After reading the pump run times from the control panel, the employee turned to walk over to the wet well. He tried to step from one concrete pad to another and then lost his footing from missing the concrete pad which resulted in him falling and striking his left shin on the crane receiver pipe, a 4" pipe extending about 12" above the concrete pad for the wet well. He went to the ER and received stiches. He was out of work for 2 days and returned to work on light duty during the following week.

All of this information has been recorded on the OSHA 300 log , 301 log and 300A log and worksman's compensation incident report. An incident investigation was performed and the preventative measure to be taken is to ensure all crane receivers at all pumpstations have the cap guard installed.

Billing Department Information

Information is based off of data gathered from the August billing reports for July usage.

Sewer Billing

	PSD customers from water meters owned by Jefferson Utilities	PSD customers from water meters owned by Charles Town Water
Number of Customers Billed	1150	1401
Number of Pastdue Customers	572	
Number of Customers Terminated	13	35
Total Amount Billed	$232,506.96	
Total Amount Collected	$230,635.24	

Water Sales

	Glen Haven	Cavaland
Gallons Sold	240,750	147,080
Number of Customers Billed	74	42
Number of Customers Terminated	0	0
Total Amount Billed	$8,825.37	
Total Amount Collected	$8,907.23	

JCPSD Commitment and Request Information
as of 8/31/18

			Commitment Requests as of 8/31/18	Request Balance	EDUs Issued	Date Given	Lot No.
			Beallair (Lots 1-3, 9-49)	0	44	12/16/2005	1-3, 9-49
			Beallair (Lots 50-304, poolhouse, store, clubhouse)	189			
					1	4/25/2013	83
					1	5/3/2013	82
					4	6/19/2013	79, 85, 86, 89
					1	11/19/2013	97
					2	12/12/2013	81, 87
					1	1/17/2014	96
					1	2/28/2014	98
					1	4/18/2014	99
					1	5/1/2014	101
					1	6/25/2014	90
					2	8/1/2014	95, 100
					1	10/27/2014	77
					1	1/7/2015	102
					1	1/27/2015	91
					2	5/1/2015	94, 110
					1	5/4/2015	120
					1	6/23/2015	88
					1	7/10/2015	115
					3	1/11/2016	92, 109, 111
					1	6/13/2016	103
					1	7/27/2016	84
					3	9/16/2016	105, 112, 93
					1	10/14/2016	119
					1	1/10/2017	132
					1	1/27/2017	126
					1	1/31/2017	113
					1	3/30/2017	127
					1	4/14/2017	131
					1	5/8/2017	76
					1	5/24/2017	80
					2	5/30/2017	114, 128
					4	9/8/2017	50, 51, 52, 53
					1	9/21/2017	133
			(CAFs)		18	11/6/2017	68-75, 116-118, 121-125, 129-130
			Burr Park Lot 22	0	1	12/14/2005	22
			Holiday Inn	0	64	12/21/2005	
			Burr Park Lot 23	0	1	5/30/2017	23
			County Green (Lots 37-73, 119, 124, 130-131)	3**	38	12/23/2005	37-73, 119
			Breckenridge Lot 64	0	1	3/27/2006	64
			Burr Park Lot 44D (DMV)	0	5.5	1/6/2006	44D
			Cambridge (Lot 74-75, 87-90, 111-114, 134-143)	12	1	10/31/2006	111
					5	6/24/2010	75, 87, 89, 90, 112
			**5 Cambridge Lots Refunded	5	0		75, 87, 89, 90, 112
					1	8/22/2013	75
					2	9/17/2013	138, 139
					1	6/12/2014	76
					1	4/3/2017	143
					1	9/29/2017	100
					1	11/21/2017	112
			Rockwells Moving & Storage (Lot 1&2)	2			
			Jefferson County Board of Education	88			
			R&L Inc. Burr Lot 1B	0	1	7/6/2006	1B
			Turf II- New Motel	120			
			First Charles Town Group, Inc. (Badger Bldg)	0	2	2/21/2008	
			Harris & Owens (Restaurant)	42			
			Arcadia (NB lots 1-13)	1	1	2/28/2006	8
					1	3/3/2006	2
					1	3/10/2006	3
					1	3/24/2006	7
					1	3/31/2006	1
					1	5/12/2006	6
					1	5/22/2006	9
					1	5/26/2006	10
					1	6/19/2006	4
					1	9/24/2007	5
					1	11/19/2012	12
					1	11/27/2012	11
			Arcadia (NB lots 46-49)	0	1	3/6/2017	46
					1	3/21/2017	47
					1	4/14/2107	49
					1	8/15/2017	
			Arcadia (NB lots 65-250)	7	10	1/13/2006	65-74
					1	9/6/2006	76
					1	9/8/2006	86
					1	11/3/2006	84
					1	12/19/2006	77
					1	5/18/2007	89
					2	10/27/2011	97,98
					5	5/22/2012	82, 83, 92, 93,94
					1	8/22/2012	81
					3	9/24/2012	85, 87, 88
					3	10/5/2012	13, 78, 100
					3	10/31/2012	80, 95, 141
					2	11/19/2012	74, 79
					1	12/18/2012	103
					1	12/7/2012	104
					2	1/11/2013	158, 159
					3	2/20/2013	101,107,153
					3	3/4/2013	96, 108, 142
					2	3/15/2013	140, 147
					1	3/22/2013	110
					4	4/3/2013	143, 150, 151, 152
					5	4/12/2013	102, 109, 154, 155, 156
					2	4/26/2013	105, 175
					2	5/10/2013	106, 149
					3	6/3/2013	90, 99, 174
					2	6/7/2013	139, 160

JCPSD Commitment and Request Information
as of 8/31/18

			Commitment Requests as of 8/31/18	Request Balance	EDUs Issued	Date Given	Lot No.
					1	6/14/2013	146
					3	6/24/2013	114, 137, 161
					1	7/17/2013	138
					1	7/18/2013	112
					2	7/31/2013	145, 148
					1	8/30/2013	91
					2	11/6/2013	113, 162
					1	11/12/2013	111
					1	12/12/2013	166
					3	1/28/2014	179, 180, 181
					2	3/21/2014	119, 163
					2	3/24/2014	118, 165
					1	3/26/2014	121
					1	4/4/2014	135
					3	4/8/2014	115, 116, 133
					1	4/16/2014	117
					1	6/4/2014	134
					2	6/16/2014	125, 136
					1	6/25/2014	188
					1	6/30/2014	177
					2	7/15/2014	124, 164
					1	8/7/2014	218
					2	8/5/2014	205, 218
					1	8/27/2014	178
					2	9/29/2014	123, 210
					1	11/20/2014	211
					2	2/4/2015	182, 186
					1	3/13/2015	122
					4	4/1/2015	176, 208, 184, 212
					1	5/6/2015	206
					1	5/7/2015	172
					4	5/26/2015	120, 157, 203, 207
					1	5/29/2015	220
					1	7/13/2015	216
					1	8/20/2015	213
					2	10/27/2015	204, 209
					1	1/11/2016	214
					2	1/29/2016	132, 173
					2	3/2/2016	189, 190
					2	3/15/2016	129, 200
					1	5/26/2016	246
					1	6/23/2016	187
					2	9/1/2016	131, 193
					2	9/19/2016	183, 185
					1	9/20/2016	215
					3	9/30/2016	130, 219, 229
					1	11/14/2016	199
					1	12/2/2016	197
					3	12/13/2016	230, 235, 244
					5	1/3/2017	126,127,128,232,241
					1	2/14/2017	223
					2	2/23/2017	202, 231
					3	3/9/2017	167, 171, 201
					1	3/21/2017	242
					2	3/30/2017	170, 228
					2	4/14/2017	222, 226
					3	4/21/2017	192, 194, 240
					1	5/9/2017	239
					2	5/24/2017	198, 233
					2	6/16/2017	196, 243
					2	7/13/2017	195, 224
					1	8/4/2017	234
					3	9/26/2017	221, 225, 227
					4	10/13/2017	168, 191, 236,245
					3	12/7/2017	169, 237, 238
			Acradia (HH lots 28-50)	23			
			Jefferson X-ing II Phase II	0	25	1/20/2006	Applebees
					18	9/12/2007	8
					11	3/31/2008	2 (Carwash)
					22	7/12/2008	1A (IHOP)
			Jefferson X-ing II Phase III	0			
					57.64	10/16/2010	Hampton Inn
					99	3/26/2015	Jefferson Apartments
			Breckenridge (Lot 67)	0	1	1/13/2006	67
			Spruce Hill North (Lots 1-119)	0	25	2/1/2006	1-16, 41-49
					1	10/16/2006	18
					1	1/11/2007	17
					1	1/18/2007	31
					1	1/23/2007	32
					1	4/4/2007	19
					1	4/24/2007	20
					1	5/14/2007	22
					1	5/14/2007	39
					1	6/13/2007	35
					1	6/26/2007	21
					1	7/6/2007	39
					1	9/20/2007	23
					1	12/6/2007	28
					1	2/22/2008	50
					1	11/25/2008	38
					1	1/15/2009	117
					2	5/13/2009	51, 114
					2	7/15/2009	27, 37
					1	9/3/2009	34
					1	12/3/2009	40
					1	1/22/2010	55
					1	3/25/2010	53
					2	4/2/2010	33, 58
					1	4/16/2010	24
					1	5/21/2010	118
					1	6/11/2010	59
					1	11/19/2010	26
					1	12/13/2010	92
					1	1/7/2011	25
					1	2/14/2011	29
					1	5/6/2011	104
					2	7/1/2011	93,96

JCPSD Commitment and Request Information
as of 8/31/18

			Commitment Requests as of 8/31/18	Request Balance	EDUs Issued	Date Given	Lot No.
					2	9/2/2011	94,116
					1	9/28/2011	52
					3	11/10/2011	30, 97, 103
					1	1/27/2012	95
					2	2/13/2012	61, 102
					1	2/28/2012	60
					1	4/4/2012	99
					1	4/12/2012	54
					1	4/12/2012	115
					1	4/23/2012	56
					1	6/8/2012	100
					1	7/11/2012	98
					1	7/27/2012	62
					2	9/14/2012	77,78
					1	10/26/2012	65
					1	12/7/2012	74
					1	1/11/2013	57
					2	2/15/2013	67,73
					2	2/25/2013	76,119
					2	3/15/2013	66, 69
					3	4/8/2013	72, 86, 87
					2	4/19/2013	64, 91
					2	5/10/2013	79, 84
					1	6/21/2013	85
					2	6/28/2013	88, 80
					1	8/7/2013	83
					2	8/16/2013	68, 82
					1	8/23/2013	144
					1	8/22/2013	70
					2	9/26/2013	89, 90
					1	12/3/2013	71
					1	2/7/2014	113
					1	2/27/2014	105
					2	3/18/2014	75, 107
					1	3/26/2014	106
					1	5/15/2014	101
					1	6/13/2014	81
					1	7/16/2014	112
					1	10/3/2014	67
					1	2/20/2015	108
					2	3/27/2015	110, 111
					1	6/25/2015	109
			Briar Run VI (Lots 277-391)	71	8	5/1/2007	277-284
					8	7/5/2007	285-292
					8	2/16/2010	293-300
					7	9/9/2010	349-355
					8	10/2/2013	356-363
					4	4/13/2018	364-367
			Briar Run VI Community Bldg	8			
			Briar Run VI Pool House	4			
			Roger Mattei Mobile Home Park	0	3	6/15/2007	15-17
			Briar Run VI (Lots 392-409)	6	6	4/13/2018	392-397
					6	5/9/2018	398-403
			Burns Street/Hostler (Lot 7-8)	0	1	3/15/2006	7,8
			Briar Run VI Commercial	15			
			Daniels Forest (Lots 1-192)	192			
			Stonecrest (Forest View) (Lots 1-225)	225			
			Euclid Ave./JP Builders, LLC (Lot 10)	0	1	10/4/2006	10
			Walnut Grove (Sterling)	0	1	1/23/2006	
			Jones/Walnut Grove (Lot 26)	0	1	2/8/2006	26
			Crossroads Church	10			
			Burr Park Lot 44A	0	3	11/2/2006	44A
			Burr Park Lot 44B	0	10	12/19/2006	44B
			Burr Park Lot 42A	5			42A
			Burr Park Lot 42B	5			42B
			Burr Park Lot 42C	5			42C
			Mr. Jenkins (Edward R. Jones Subd. Lots B & C by Greenfield)	0	1	9/21/2006	B & C
			Mr. Mazaris (8837 Charles Town Rd)	1			
			Burr Lot 24	0	1	2/12/2009	24
			422 Burns Street (Roper)	0	1	3/21/2007	11,12
			420 Burns Street (Roper)	0	1	4/2/2007	12,13
			Beallair Mansion	0	1	6/5/2007	480
			Beallair Studio	0	1	6/5/2007	494
			Clems Drive (Kathleen Modolo)	0	1	6/29/2007	8
			Ranson (Resolution 6/22/07)	0	150	6/22/2007	Resolution
			Burr Park Lot 43B-2	0	2	4/10/2008	43B2
			Burns Street (Mark Roper 6,205,207,213,215,229,231,237, 239,241,243,247)	0	12	8/23/2007	
			Jefferson County Development Authority	0	134	12/1/2007	CAA
			Ranson Self Storage	0	1	1/10/2008	
			Security Hills/Walnut Grove (Thomas Silger)	0	1	9/29/2008	20
			Flowing Acres Road (Ricky French, Jr.)	0	1	10/29/2008	1
			Reimburse 150 EDU's from Ranson per Sue 3/13/09	150	0		Resolution
			Board of Education (New Elementary School)	0	17	11/20/2009	
			Apple Valley Waste Services (Burr Park)	0	1	10/29/2010	21
			Reimburse 134 EDU's from JCDA 10/3/2011	134	0	10/3/2011	
			Burr Business Park Lot 42 (Mark Cerasi-Sur Loc)	0	1	2/7/2012	42
			Burr Business Park Lot 8 (ARC-FD, Coast Guard)	0	23	8/22/2013	8
			Burr Industrial Park Lot 18A-2	0	1	4/9/2014	18A-2
			Burr Industrial Park Lot 29 (Kubic Enterprises)	0	1	7/7/2014	29
			Raymond L Johnson (85 Belvedere Dr Unit 2)	1	0		
			Roy Smoot (Lot 1 Euclid Ave)	0	1	8/7/2015	1
			Benjamin Dilworth (0 Iris Way)	0	1	8/19/2015	11-C
			Burr Industrial Park Lot 40 (McGee Civil Construction)	0	1	8/25/2015	40
			Marcus Homes LLC (Lot 2 Euclid Ave)	0	1	11/2/2015	2
			CD DG Charles Town, LLC (Dollar General)	0	1	2/3/2016	
			Burr Industrial Park Lot 41 (Kubic Construction)	0	1	3/10/2016	
			Burr Industrial Park Lot 11 (Kublic Construction)	0	1	5/18/2016	

JCPSD Commitment and Request Information
as of 8/31/18

			Commitment Requests as of 8/31/18	Request Balance	EDUs Issued	Date Given	Lot No.
			Jefferon Crossing - Homes 2 Suites Hotel (Uniwest)	0	40		
			Apple Valley Waste Services (Burr Park) Lot 2&3	0	8	7/20/2016	
			Euclid Ave./PD Propst Enterprise, LLC (Lot 23)	0	1	7/22/2016	
			Lutman Properties (Jefferson Ave Lot 4)	0	1	12/20/2016	
			Lutman Properties (Jefferson Ave Lot 6)	0	1	12/20/2016	
			Aspen Greens Phase 1 (Lots 1-20)	7	2	4/26/2017	17, 18
					1	8/22/2017	14
					1	10/26/2017	16
					1	11/2/2017	15
					1	11/9/2017	19
					1	1/26/2018	10
					2	2/20/2018	11, 12
					2	3/7/2018	7, 13
					1	5/4/2018	4
					1	6/13/2018	9
					2	7/27/2018	2, 37
					1	8/6/2018	20
			Doug Quigley - Greenfield	0	1	11/30/2017	23
			Jefferson Crossing II Apartments Ph 2 (4th building)	0	24	3/9/2018	1C-1D
			JCDA - Burr Business Park (Tema)	0	4	6/26/2018	19, 20, 21
			Total EDU Requests	**2399.14**			
			Total EDUs Issued	**1313.14**			
			***5/21/07 Per GM instructions, .5 EDU's will be dropped from this list and moving forward. EDU's will be sold only as whole numbers.				

Impact Fees Collected for August 2018 by the Jefferson County Permitting Office

AgreementIFC SignatureDate	Process Number	LandUseType	ApplicantLastName	ApplicantFirstName	PropOwnerLastName	PropOwnerFirstName	Subdivision	Lot Number	TaxDistrict	Tax Map	Tax Parcel	Exemption Requested
01-Aug-18	1800199	Town Home	Thomas	John	Thomas	John		19	08 Ranson Corp	7	154	0
01-Aug-18	1800200	Town Home	Thomas	John	Thomas	John		20	08 Ranson Corp	7	154	0
06-Aug-18	1800201	Single Family		Dan Ryan Builders		Dan Ryan Builders	Aspen Green	2	02 Charles Town	4G	.	0
06-Aug-18	1800202	Single Family		Dan Ryan Builders		Dan Ryan Builders	Aspen Green	37	02 Charles Town	.	.	0
06-Aug-18	1800203	Single Family		Dan Ryan Builders		Dan Ryan Builders	Aspen Green	20	02 Charles Town	4G	20	0
06-Aug-18	1800204	Single Family		DR Acquisitions, LLC		DR Acquisitions, LLC	Sheridan Estates	131	04 Harpers Ferry	9D	131	0
08-Aug-18	1800205	Single Family		K Hovnanian Homes		K Hovnanian Homes	Shendandoah Spring	5D	08 Ranson Corp	8D	5D	0
08-Aug-18	1800206	Single Family		K Hovnanian Homes		K Hovnanian Homes	Shenandoah Springs	19A	08 Ranson Corp	8D	19A	0
08-Aug-18	1800207	Single Family		K Hovnanian Homes		K Hovnanian Homes	Shenandoah Springs	23D	08 Ranson Corp	8D	23D	0
14-Aug-18	1800208	Single Family	Wilcom	Marisa	Wilcom	Marisa	Keller Minor	2	07 Middleway	20	11.17	0
20-Aug-18	1800209	Single Family	Wisler	Angela	Wisler	Sean and Angela	Rock Ferry Station	41	06 Kabletown	22	14.41	0
22-Aug-18	1800211	Duplex		Shepherdstown East Development, LLC		Shepherdstown East Development, LLC	Shepherd Village	28	10 Shepherdstown	3B	28	0
22-Aug-18	1800212	Duplex		Shepherdstown East Development, LLC		Shepherdstown East Development, LLC	Shepherd Village	32	10 Shepherdstown	3B	32	0
22-Aug-18	1800213	Duplex		Shepherdstown East Development, LLC		Shepherdstown East Development, LLC	Shepherd Village	33	10 Shepherdstown	3B	33	0
22-Aug-18	1800214	Duplex		Shepherdstown East Development, LLC		Shepherdstown East Development, LLC	Shepherd Village	34	10 Shepherdstown	3B	34	0
22-Aug-18	1800215	Duplex		Shepherdstown East Development, LLC		Shepherdstown East Development, LLC	Shepherd Village	35	10 Shepherdstown	3B	35	0
31-Aug-18	1800216	Single Family	Hill	Christopher	Hill	Christopher	Rock Hill Estates	2	09 Shepherdstown	13	34.16	0

Jefferson County Public Service District
FY 2018-2019 Budget -1 month
Operation & Maintenance

Collecting System Expenses:	**Total Budget**	**Budget**	**July Total**	**Year to Date**	**Difference**
Supplies and Expenses	4,325.00	360.42	0.00	0.00	360.42
Operation Labor	23,000.00	1,916.67	917.55	917.55	999.12
Total	***27,325.00***	***2,277.08***	***917.55***	***917.55***	***1,359.53***
Pumping System Expenses:					
Power and Fuel	46,550.00	3,879.17	5,091.47	5,091.47	(1,212.30)
Supplies and Expense	151,440.00	12,620.00	3,156.43	3,156.43	9,463.57
Operation Labor	84,000.00	7,000.00	4,507.29	4,507.29	2,492.71
Total	***281,990.00***	***23,499.17***	***12,755.19***	***12,755.19***	***10,743.98***
Treatment and Disposal:					
Rents	1,040,850.00	86,737.50	86,202.00	86,202.00	535.50
Supplies & Expense	16,000.00	1,333.33	59.14	59.14	1,274.19
Operation Labor	6,500.00	541.67	365.04	365.04	176.63
Total	***1,063,350.00***	***88,612.50***	***86,626.18***	***86,626.18***	***1,986.32***
Billing and Collecting and Accounting:					
Billing, Collecting, and Accounting	20,916.00	1,743.00	1,669.37	1,669.37	73.63
Labor	130,500.00	10,875.00	8,849.43	8,849.43	2,025.57
Total	***151,416.00***	***12,618.00***	***10,518.80***	***10,518.80***	***2,099.20***
Administrative and General					
Administrative and General Salaries	221,300.00	18,441.67	15,930.85	15,930.85	2,510.82
General Officer Salaries	8,050.00	670.83	0.00	0.00	670.83
Expense of General Officers	3,300.00	275.00	0.00	0.00	275.00
General Office Suppliers and Expense	79,000.00	6,583.33	6,341.60	6,341.60	241.73
Admin. and General Insurance	48,812.00	12,203.00	12,514.00	12,514.00	(311.00)
Injuries and Damages/Workers Comp	12,748.00	1,062.33	0.00	0.00	1,062.33
Employee Insurance	60,300.00	5,025.00	4,806.82	4,806.82	218.18
Pension and FICA Tax Expense	82,125.45	6,843.79	8,335.38	8,335.38	(1,491.59)
Miscellaneous General Expense	41,400.00	3,450.00	349.85	349.85	3,100.15
Maintenance of General Property	4,615.00	384.58	375.00	375.00	9.58
Bad Debt	15,000.00	1,250.00	0.00	0.00	1,250.00
Transportation	21,700.00	1,808.33	1,634.59	1,634.59	173.74
Rent Expense	71,487.12	7,871.78	7,871.78	7,871.78	0.00
Special Expense	99,328.40	8,277.37	3,056.25	3,056.25	5,221.12
Total	***769,165.97***	***74,147.02***	***61,216.12***	***61,216.12***	***12,930.90***
Total Operation and Maintenance	***2,293,246.97***	***201,153.77***	***172,033.84***	***172,033.84***	***29,119.93***
Debt Service Expense	454,623.00	37,885.25	37,574.50	37,574.50	310.75
Note Payable	56,376.00	4,698.00	4,697.65	4,697.65	0.35
Total Debt Service	***510,999.00***	***42,583.25***	***42,272.15***	***42,272.15***	***311.10***
Renewal and Replacement Fund	76,618.65	6,384.89	5,995.03	5,995.03	389.86
Total Renewal and Replacement Func	***76,618.65***	***6,384.89***	***5,995.03***	***5,995.03***	***389.86***
Total Cash Requirement	***2,880,864.62***	***250,121.91***	***220,301.02***	***220,301.02***	***29,820.89***

Jefferson County Public Service District
FY 2018-2019 Budget -1 month

Revenue Estimate:

	Total Budget	Budget	July Total	Year to Date	Difference
Operating Revenue	2,967,818.43	247,318.20	244,905.06	244,905.06	2,413.14
Non-Operating Revenue	96,927.57	8,077.30	6,631.78	6,631.78	1,445.52
Total Revenue	***3,064,746.00***	***255,395.50***	***251,536.84***	***251,536.84***	***3,858.66***

Cash Flow:

Available Cash:			
Operating Revenues	244,905.06		
Other Income	6,631.78		
Total Available Cash		251,536.84	
Cash Requirements:			
Operating Expenses	172,033.84		
Total Cash Requirements		172,033.84	
Cash Available for Debt Service (A)			79,503.00
Debt Service Requirements:			
Total Debt Service Requirements ($38,632 x 1 month) (B)			38,632.00
Remaining Cash Surplus (Deficit) to fund Renewal and Replacement fund and bank loan payments (A-B)			40,871.00
Renewal and Replacement Account			5,995.03
Note payable			4,697.65
Remaining Cash Surplus (Deficit)			***30,178.32***
Percent Coverage (A)(B)			***206%***

***This is a monthly budget that is submitted to the District Board Members for informational purposes. Items that are over-budget for the year must be approved by the board and a budget revision is prepared for the following board meeting.**

EXPLANATION:

Contract Services	**1,485.75**
Special Services (Engineering)	**0.00**
Accounting Services	**1,320.50**
Legal Expense	**250.00**
	$ 3,056.25

1. Pump System Expense-Power & Fuel- Line item is over for July because of the increase in the electric & fuel costs at pump station 3-9. Hopefully this will be resolved when the new pumps are installed.

2. Admin & General Insurance- Line item will have to be revised when the budget revision is prepared. The quarterly payment went from $12,203 a quarter to $12,514 as of 7/1/18.

3. Pension & FICA Tax Expense-Line item is over for the month because there were three pay periods expensed in July.

Jefferson County Public Service
Sewer
Revenue & Expense July 31, 2018

	July 2018	YTD
Revenues		
1-00-0-3190 Interest Income	488.08	488.08
1-00-0-3192 Reconnect & Disconnect Fee	840.00	840.00
1-00-0-3601 Unmetered Residential Sales	8,298.36	8,298.36
1-00-0-3611 Metered Residential Sales	162,600.77	162,600.77
1-00-0-3612 Metered Commercial Sales	51,117.02	51,117.02
1-00-0-3613 Metered Industrial Sales	5,813.17	5,813.17
1-00-0-3614 Metered Public Authorities	8,506.32	8,506.32
1-00-0-3616 Metered Residential Sales - Deerfield	3,940.05	3,940.05
1-00-0-3617 Metered Commercial Sales - Deerfield	40.62	40.62
1-00-0-3700 Penalties	4,588.75	4,588.75
1-00-0-3962 Income from Bad Debts Recovered	(71.28)	(71.28)
1-00-0-3990 Miscellaneous Revenues	1,923.98	1,923.98
1-00-0-3991 Misc nonoperating income	3,451.00	3,451.00
Total Revenues	**251,536.84**	**251,536.84**
Expenses		
Collecting System		
1-10-0-5030 CS - Operation Labor	917.55	917.55
1-10-0-5040 CS - FICA Taxes	106.04	106.04
1-10-0-5050 CS - Group Insurance	96.34	96.34
1-10-0-5060 CS - Retirement	138.62	138.62
Total Collecting System	**1,258.55**	**1,258.55**
Deerfield Collecting System		
Total Deerfield Collecting System	**0.00**	**0.00**
Ranson Collecting System		
Total Ranson Collecting System	**0.00**	**0.00**
Pumping System		
1-20-0-5030 PS - Operation Labor	4,462.11	4,462.11
1-20-0-5040 PS - FICA Taxes	499.50	499.50
1-20-0-5050 PS - Group Insurance	554.67	554.67
1-20-0-5060 PS - Retirement	652.93	652.93
1-20-0-6110 PS - Telephone Expense	593.00	593.00
1-20-0-6130 PS - Power - Electric	4,411.18	4,411.18
1-20-0-6131 PS - Power - Gas	287.31	287.31
1-20-0-6160 PS - M&R Equipment	2,123.42	2,123.42
1-20-0-7410 PS - Materials & Supplies	250.70	250.70

Jefferson County Public Service
Sewer
Revenue & Expense July 31, 2018

	July 2018	YTD
Total Pumping System	**13,834.82**	**13,834.82**
Deerfield Pumping System		
1-21-0-5030 PS-Deerfield Operation Labor	45.18	45.18
1-21-0-5040 PS-Deerfield FICA Taxes	8.63	8.63
1-21-0-5050 PS- Deerfield Group Insurance	0.00	0.00
1-21-0-5060 PS- Deerfield Retirement	11.27	11.27
1-21-0-5070 PS-Deerfield Workers Compensation	0.00	0.00
1-21-0-6110 PS- Deerfield Telephone Expense	144.19	144.19
1-21-0-6130 PS-Deerfield-Power-Electric	392.98	392.98
1-21-0-6131 PS-Deerfield Power- Gas	0.00	0.00
1-21-0-6150 M&R Bldgs & Grounds - Deerfield	0.00	0.00
1-21-0-7410 PS- Deerfield Supplies Expense	45.12	45.12
Total Deerfield Pumping System	**647.37**	**647.37**
Sewer Treatment Plant		
1-30-0-6190 STP - Rents	86,202.00	86,202.00
Total Sewer Treatment Plant	**86,202.00**	**86,202.00**
Deerfield Sewer Treatment Plant		
1-31-0-5030 STP-Deerfield Treatment Plant	365.04	365.04
1-31-0-5040 STP- Deerfield FICA	60.72	60.72
1-31-0-5050 STP-Deerfield Group Insurance	72.42	72.42
1-31-0-5060 STP- Deerfield Retirement	79.33	79.33
1-31-0-6130 STP-Deerfield Treatment Electric	14.02	14.02
1-31-0-7410 STP- Deerfield Materials & Supplies	45.12	45.12
Total Deerfield Sewer Treatment Plant	**636.65**	**636.65**
Customer Accounts		
1-50-0-5030 CA - Billing, Collecting & Accounting	5,944.19	5,944.19
1-50-0-5032 CA - Accounting	2,905.24	2,905.24
1-50-0-5040 CA - FICA Taxes	980.06	980.06
1-50-0-5050 CA - Group Insurance	1,344.87	1,344.87
1-50-0-5060 CA - Retirement	1,326.26	1,326.26
Total Customer Accounts	**12,500.62**	**12,500.62**
Deerfield Customer Accounts		
Total Deerfield Customer Accounts	**0.00**	**0.00**
Meter Reading		

Jefferson County Public Service
Sewer
Revenue & Expense July 31, 2018

	July 2018	YTD
Total Meter Reading	**0.00**	**0.00**
General & Administrative		
1-70-0-5030 G&A - Salaries & Wages	8,319.89	8,319.89
1-70-0-5032 G&A - Annual Leave	2,305.26	2,305.26
1-70-0-5033 G&A - Sick Pay	3,706.34	3,706.34
1-70-0-5034 G&A - Holiday Pay	1,599.36	1,599.36
1-70-0-5040 G&A - FICA Taxes	1,896.37	1,896.37
1-70-0-5050 G&A - Group Insurance - Employees	2,738.52	2,738.52
1-70-0-5060 G&A - Retirement	2,575.65	2,575.65
1-70-0-6110 G&A - Telephone Expense	632.86	632.86
1-70-0-6130 G&A - Power - Electric	313.48	313.48
1-70-0-6131 G&A - Power - Gas	1,487.04	1,487.04
1-70-0-6140 G&A - Travel	50.29	50.29
1-70-0-6150 G&A - M&R Bldgs & Grounds	375.00	375.00
1-70-0-6160 G&A - M&R Equipment	188.38	188.38
1-70-0-6170 G&A - M&R Autos & Trucks	147.55	147.55
1-70-0-6180 Postage	1,669.37	1,669.37
1-70-0-6190 G&A - Rents	7,538.18	7,538.18
1-70-0-6260 G&A - Insurance	12,514.00	12,514.00
1-70-0-6270 G&A - Property Tax	333.60	333.60
1-70-0-6300 G&A - Contract Services	1,485.75	1,485.75
1-70-0-6310 G&A - Accounting Services	1,320.50	1,320.50
1-70-0-6320 G&A - Legal Services	250.00	250.00
1-70-0-6400 G&A - Interest Expense	77.07	77.07
1-70-0-6401 G&A - Interest on Long Term Debt	10,597.51	10,597.51
1-70-0-6402 G&A - Amort. - Debt Disc & Exp	4,997.83	4,997.83
1-70-0-6403 G&A - Depreciation Expense	34,021.22	34,021.22
1-70-0-7410 G&A - Materials & Supplies (Office Expenses)	5,206.88	5,206.88
1-70-0-9900 G&A - Miscellaneous & General	222.49	222.49
Total General & Administrative	**106,570.39**	**106,570.39**
Deerfield General & Administrative		
Total Deerfield General & Administrative	**0.00**	**0.00**
Cavaland Supply Payroll		
1-90-1-5030 CS - Operation Labor	516.12	516.12
1-90-1-5040 CS - FICA Taxes	56.75	56.75
1-90-1-5050 CS - Group Insurance	63.58	63.58
1-90-1-5060 CS - Retirement	74.15	74.15
Total Cavaland Supply Payroll	**710.60**	**710.60**
Cavaland Dstrb System Payroll		

Jefferson County Public Service
Sewer
Revenue & Expense July 31, 2018

	July 2018	YTD
1-90-2-5030 CDS - Operation Labor	16.25	16.25
1-90-2-5040 CDS - FICA Taxes	1.24	1.24
1-90-2-5060 CDS - Retirement	1.63	1.63
Total Cavaland Dstrb System Payroll	**19.12**	**19.12**
Cavaland Billing Payroll		
1-90-3-5030 CB - Operation Labor	60.05	60.05
1-90-3-5040 CB - FICA Taxes	7.69	7.69
1-90-3-5050 CB - Group Insurance	6.00	6.00
1-90-3-5060 CB - Retirement	10.06	10.06
Total Cavaland Billing Payroll	**83.80**	**83.80**
Glen Haven Supply		
1-90-4-5030 GHS - Operation Labor	473.84	473.84
1-90-4-5040 GHS - FICA Taxes	53.84	53.84
1-90-4-5050 GHS - Group Insurance	60.38	60.38
1-90-4-5060 GHS - Retirement	70.38	70.38
Total Glen Haven Supply	**658.44**	**658.44**
Glen Haven Dstrb System Payroll		
1-90-5-5030 GHDS - Operation Labor	48.75	48.75
1-90-5-5040 GHDS - FICA Taxes	6.33	6.33
1-90-5-5050 GHDS - Group Insurance	6.16	6.16
1-90-5-5060 GHDS - Retirement	8.26	8.26
Total Glen Haven Dstrb System Payroll	**69.50**	**69.50**
Glen Haven Billing Payroll		
1-90-6-5030 GHB - Operation Labor	121.88	121.88
1-90-6-5040 GHB - FICA Taxes	14.92	14.92
1-90-6-5050 GHB - Group Insurance	21.56	21.56
1-90-6-5060 GHB - Retirement	19.51	19.51
Total Glen Haven Billing Payroll	**177.87**	**177.87**
Cavaland Accounting		
Total Cavaland Accounting	**0.00**	**0.00**
Glen Haven Accounting		
Total Glen Haven Accounting	**0.00**	**0.00**
Water Labor Adjustment Account		
1-90-9-5030 Water Labor Adjustment Account	(1,719.33)	(1,719.33)

Jefferson County Public Service
Sewer
Revenue & Expense July 31, 2018

	July 2018	YTD
Water Labor Adjustment Account	(1,719.33)	(1,719.33)
Total Expenditures	221,650.40	221,650.40
Net Revenue & Expenses	29,886.44	29,886.44

Jefferson County
Public Service District
Balance Sheet
July 31, 2018

ASSETS

Cash	
Operating Cash	218,921.71
Cash Drawer	200.00
Petty Cash	500.00
Cash - 2015 CIF Account	479,685.34
Cash - New WWTP CIF-CAF	152,777.99
Cash - Renewal & Replacement	127,679.39
Cash - Customer Security Deposits	181,731.16
Cash - Online Customer Payments	16,204.94
Cash - Sewer SB-234 Reserve Fund	264,059.52
Sinking Fund - 88B Revenue	12,036.70
Sinking Fund - 88B Reserve	10,974.49
Sinking Fund - 98B Revenue	30,102.73
Sinking Fund - 98B Reserve	9,736.49
Sinking Fund - 99A Revenue	4,005.94
Sinking Fund - 99A Reserve	12,673.78
Sinking Fund - 00A Revenue	11,337.15
Sinking Fund - 00A Reserve	38,684.56
Sinking Fund - 2008A Reserve	67,163.37
Sinking Fund - 2008A Revenue	12,195.70
Sinking Fund- 2010A Revenue	107,324.95
Sinking Fund- 2010A Reserve	154,608.82
Sinking Fund- 2013A Sewer Revenue	29,355.27
Sinking Fund- 2013A Sewer Reserve	146,715.10
Total Cash	**2,088,675.10**
Accounts Receivable	
A/R - Customer	92,738.89
Allowance for Doubtful Accounts	(10,000.00)
A/R - Other	12,481.90
Due To/From Other Utilities	3,844.26
Total Accounts Receivable	**99,065.05**

Jefferson County
Public Service District
Balance Sheet
July 31, 2018

Accrued Utility Revenues	
A/R - Accrued Utility Revenue	236,895.71
A/R - Damage to PS 1-12A	3,700.00
Total Accrued Utility Revenues	**240,595.71**
Fixed Assets	
Utility Plant	19,850,350.65
Construction in Progress	0.00
Preliminary Surveys	898,361.90
Accumulated Depreciation	(7,566,149.46)
Total Fixed Assets	**13,182,563.09**
Other Assets	
Office Lease Deposit	5,781.80
Def Loss on Bond Refinancing	197,341.94
Unamortized Bond Issue Costs	207,321.49
Total Other Assets	**410,445.23**
TOTAL ASSETS	**16,021,344.18**
LIABILITIES	
Accounts Payable	
A/P - Trade	105,967.68
Advances for Construction-CIF	2,254.00
Accrued Interest	27,069.96
Customer Deposits Payable	172,537.17
Accrued- Salaries, Taxes & Expenses	20,145.73
Accrued Vacation	19,411.42
Revenue Bonds & Notes Payable	5,900,879.68
OPEB Liability	203,524.04
Total Accounts Payable	**6,451,789.68**
Contributed Capital	
Contrib In Aid of Constr.	10,028,080.19

Jefferson County
Public Service District
Balance Sheet
July 31, 2018

CIAC-Governors Grant	240,000.00
Total Contributed Capital	**10,268,080.19**
TOTAL LIABILITIES	**16,719,869.87**
RETAINED EARNINGS	
Net Rev & Exp, Current Year	29,886.44
Retained Earnings Prior Year	(728,412.13)
TOTAL RETAINED EARNINGS	**(698,525.69)**
TOTAL LIABILITIES & RETAINED EARNINGS	**16,021,344.18**

JEFFERSON COUNTY PUBLIC SERVICE DISTRICT

Revenue & Recommended Payment-September 10, 2018

Ending Balance from August 7, 2018 board meeting (per books)	$	41,441.96
Checking Account Balance September 10, 2018	$	284,733.61
System Fees		
Glen Haven & Cavaland		1,909.20
Transfers		
Transfer from Sewer Security Deposit Account	$	5,530.51
Transfer from Renewal & Replacement Account	$	1,508.96
Total Other Funds		
Total Funds Available	**$**	**293,682.28**

Recommended Approval	**$**	**196,111.43**
Remaining Balance	$	97,570.85

Expenses Pay To:	Total	Recommended Approval	
Bank of Charles Town	4,697.65	4,697.65	
Charles Town Utility Board	81,386.00	81,386.00	*
Dept. of Tax & Revenue	2,172.23	2,172.23	
PEIA	3,702.60	3,702.60	*
Petty Cash	104.96	104.96	
RAI Group	86.52	86.52	
RAI Group	362.44	362.44	
RAI Group	6375.00	6,375.00	*
Renewal & Replacement	6,287.29	6,287.29	*
Retiree Health Benefit Trust Fund	1,464.00	1,464.00	
WV Municipal Bond	38,831.39	38,831.39	
WV Public Retirement Board	7,436.53	7,436.53	
Aflac	57.60	57.60	
Amerigas	60.31	60.31	
BB&T Bankcard Corporation	1,159.16	1,159.16	
Biedlers Electric	25.63	25.63	
Biedlers Electric	49.24	49.24	
Biedlers Electric	51.26	51.26	
Biedlers Electric	1,600.42	1,600.42	*
Brickstreet Mutual Insurance Co	410.00	410.00	
Charles Town Utility Board	1,059.75	1,059.75	
Cox Hollida & Professionals	316.50	316.50	
Cox Hollida & Professionals	125.00	125.00	
Crystal Springs	35.27	35.27	
Dodson's Septic Cleaning	100.00	100.00	

Dodson's Septic Cleaning	200.00	200.00	
Dodson's Septic Cleaning	300.00	300.00	
Evoqua Water Technologies, Inc.	260.00	260.00	
Evoqua Water Technologies, Inc.	300.00	300.00	
Federal Express	36.72	36.72	
Fluid Solutions	6,158.20	6,158.20	*
Frontier	142.67	142.67	
Guys Buick & Pontiac	543.25	543.25	
Home Depot	79.75	79.75	
Marcum Pump	281.00	281.00	
Marcum Pump	281.00	281.00	
Marcum Pump	1,508.96	1,508.96	*
Miss Utility	76.00	76.00	
Omnisite	593.00	593.00	
Potomac Edison	23.03	23.03	
Potomac Edison	158.03	158.03	
Potomac Edison	380.15	380.15	
Potomac Edison	3,772.44	3,772.44	*
Purcellville Computers	216.00	216.00	
R. M. Roach & Sons	90.07	90.07	
R. M. Roach & Sons	90.32	90.32	
R. M. Roach & Sons	97.55	97.55	
R. M. Roach & Sons	107.82	107.82	
R. M. Roach & Sons	135.85	135.85	
R. M. Roach & Sons	144.00	144.00	
R. M. Roach & Sons	154.01	154.01	
R. M. Roach & Sons	214.28	214.28	
Records Management Solutions	189.60	189.60	
Sheetz Advantage Card	2,366.04	2,366.04	*
Spilman Thomas & Battle	2,359.53	2,359.53	*
Sprint	376.30	376.30	
Staples	365.51	365.51	
State Board of Risk	12,514.00	12,514.00	*
Tammy Wilt	250.00	250.00	
The Journal	32.89	32.89	
Thomassen Auto Group	69.51	69.51	
Toshiba Financial Services	332.50	332.50	
Toshiba Financial Services	188.86	188.86	
United Concordia Companies, Inc	493.20	493.20	
USA Bluebook	506.17	506.17	
USA Bluebook	513.72	513.72	
USA Bluebook	656.47	656.47	
Valley Credit Service, Inc.	71.28	71.28	
WVDEP	525.00	525.00	
	$ 196,111.43	**$ 196,111.43**	

*Denotes Payments Signed By The Board
All Other Payments Have Been Signed By The General Manager

Water System Expenses

Revenue & Recommended Payments-September 10, 2018

Ending Balance from August 7, 2018 (per books)	$	(2,515.88)
Checking Account Balance September 10, 2018		6,513.83
Transfers		
Transfer from Water Security Deposit Account	$	114.24
Total Funds Available	**$**	**6,628.07**
Recommended Approval	**$**	**6,608.57**

		Due		Recommended
NEW BILLS				
PSD Labor approved at prev. meetings (not paid)		2,965.03		500.00 *
Jefferson County PSD Labor		1,909.20		1,909.20 *
Renewal & Replacement		225.00		225.00
WV Municipal Bond		3,462.55		3,462.55
BB&T Bankcard Corporation		33.84		33.84
Frontier		86.35		86.35
Frontier		86.35		86.35
Potomac Edison		92.35		92.35
Potomac Edison		117.93		117.93
Reliance Laboratories		15.00		15.00
WVDHHR		40.00		40.00
WVDHHR		40.00		40.00
Total New Bills	$	9,073.60	$	6,608.57
New Balance Forward	$	(2,445.53)	$	19.50

MEMORANDUM

Re: Approve transfers

To: Jefferson County PSD Board Members & Professionals

Date: September 6, 2018

Preparers: April Shultz, General Manager

Action:

Approve transfer of $5,530.51 from the New Sewer Security Deposit account to the Sewer Operating account for 51 security deposit refunds.

Approve transfer of $114.24 from the Water Security Deposit account to the Water Operating account for 2 security deposit refunds.

Approve transfer of $1508.96 from the Renewal & Replacement account to the Sewer Operating account for upgrade/repair to pump station 3-6.

Approve transfer of $6158.20 from the Renewal & Replacement account to the Sewer Operating account for new pump at pump station 4-4.

Approve transfer of $1600.42 from the Renewal & Replacement account to the Sewer Operating account for pump repair and capacitors at pump station 4-4.